INTEGRALITY OF LINEARIZATIONS OF POLYNOMIALS OVER BINARY VARIABLES USING ADDITIONAL MONOMIALS

CHRISTOPHER HOJNY[1], MARC E. PFETSCH[2], AND MATTHIAS WALTER[3]

Abstract. Polynomial optimization problems over binary variables can be expressed as integer programs using a linearization with extra monomials in addition to those arising in the given polynomial. We characterize when such a linearization yields an integral relaxation polytope, generalizing work by Del Pia and Khajavirad (SIAM Journal on Optimization, 2018) and Buchheim, Crama and Rodríguez-Heck (European Journal of Operations Research, 2019). We also present an algorithm that finds these extra monomials for a given polynomial to yield an integral relaxation polytope or determines that no such set of extra monomials exists. In the former case, our approach yields an algorithm to solve the given polynomial optimization problem as a compact LP, and we complement this with a purely combinatorial algorithm.

Keywords: polynomial optimization, linearization, integer linear programming

After the completion of this manuscript we learned that results proved here have essentially already been obtained by Del Pia and Khajavirad ("The running intersection relaxation of the multilinear polytope", Optimization Online, `http://www.optimization-online.org/DB_HTML/2018/05/6618.html`). Note that we use a different notation.

1. Introduction

For a positive integer n, the problem of minimizing a polynomial over binary variables $x_1, x_2, \ldots, x_n$ can be formulated as

$$\min \Big\{ \sum_{m \in \mathcal{T}} a_m \cdot \prod_{i \in m} x_i \;:\; x \in \{0,1\}^n \Big\}, \tag{1}$$

where $\mathcal{T}$ is a set of subsets of $[n] := \{1, \ldots, n\}$ representing *target monomials* and $a_m \in \mathbb{R}$, $m \in \mathcal{T}$, are the corresponding monomial coefficients. Note that due to $x^2 = x$ for binary variables x, no higher order powers appear.

A common approach to solve (1) is to linearize the monomials in order to obtain a binary linear program. The most common way is the following. For each monomial $m \in \mathcal{T}$, one adds a binary variable z_m representing the value of the monomimal, i.e., $z_m = \prod_{i \in m} x_i$. One can view z_m as the conjunction/AND-resultant of the variables in the monomial. An integer formulation (the AND-formulation/relaxation) for this relation is given by

$$\sum_{i \in m} x_i \le |m| - 1 + z_m \qquad \text{and} \qquad z_m \le x_i \text{ for all } i \in m. \tag{2}$$

For the special case for $|m| = 2$ the inequalities are sometimes called *McCormick inequalities* [32]. With these variables the objective function in (1) then becomes the linear function $\sum_{m \in \mathcal{T}} a_m \cdot z_m$. The resulting formulation is called the *standard linearization*. Del Pia and

[1]Combinatorial Optimization Group, Eindhoven University of Technology, Eindhoven, The Netherlands, *E-mail*: `c.hojny@tue.nl`

[2]Research Group Optimization, TU Darmstadt, Darmstadt, Germany, *E-mail*: `pfetsch@opt.tu-darmstadt.de`

[3]Department of Applied Mathematics, University of Twente, Enschede, The Netherlands, *E-mail*: `m.walter@utwente.nl`

Date: November 2019.

Khajavirad [18] and Buchheim, Crama and Rodríguez-Heck [?] characterized when such a linearization yields integral polytopes.

Clearly, when constructing a linearization, one is not limited to using the target monomials. For instance, for the target monomials $\mathcal{T} = \{\{1,2,3\},\{2,3,4\}\}$ one may add the auxiliary monomial $\{2,3\}$, i.e., replace $z_{\{1,2,3\}} = x_1 \cdot x_2 \cdot x_3$ and $z_{\{2,3,4\}} = x_2 \cdot x_3 \cdot x_4$ by $z_{\{1,2,3\}} = x_1 \cdot z_{\{2,3\}}$, $z_{\{2,3,4\}} = z_{\{2,3\}} \cdot x_4$ and $z_{\{2,3\}} = x_2 \cdot x_3$. Although this makes no difference for the integer solutions, it turns out that the strengths of the corresponding linearizations differ. In this paper, we extend the integrality characterization of Del Pia and Khajavirad to the case with additional monomials.

1.1. Literature Review

Linearizations of multilinear expressions over binary variables have been widely studied in the literature. To find the strongest linearization of a set of bilinear terms over a set of binary variables, Padberg [34] introduced the *Boolean Quadric Polytope*

$$\mathrm{BQP}_n \coloneqq \operatorname{conv}\left\{(x,y) \in \{0,1\}^n \times \{0,1\}^{\frac{n(n-1)}{2}} : x_i \cdot x_j = y_{i,j} \text{ for all } i,j \in [n] \text{ with } i<j\right\},$$

which allows to minimize a bilinear expression in binary variables by integer linear programming techniques. A standard linear programming formulation of BQP_n is to replace $x_i \cdot x_j = y_{i,j}$ by the inequalities from the standard linearization (2) for each term, i.e., adding the McCormick inequalities. To strengthen this integer programming formulation of BQP_n, several facet defining inequalities have been derived, see, e.g., Boros and Hammer [9], Macambira and De Souza [30], and Yajima and Fujie [37]. Boros et al. [8] completely characterize the first Chvátal closure of the standard formulation for BQP_n. Moreover, De Simone [16] showed that BQP_n is the image of a cut polytope under a bijective linear transformation. Thus, facet descriptions (or relaxations) of BQP_n can be found by studying cut polytopes and applying the linear transformation. Barahona et al. [4] use the relation of BQP_n to the cut polytope to develop a branch-and-cut algorithm for solving quadratic 0-1 programs. Letchford and Sørensen [28] present an efficient separation algorithm for certain classes of facet defining inequalities for BQP_n.

Analogously to the bilinear case, multilinear optimization problems can be solved by integer linear programming techniques by minimizing a linear function over the *Boolean Multilinear Polytope*

$$\mathrm{BMP}_n(\mathcal{T}) \coloneqq \operatorname{conv}\left\{(x,y) \in \{0,1\}^n \times \{0,1\}^{\mathcal{T}} \ : \ \prod_{i \in m} x_i = y_m \text{ for all } m \in \mathcal{T}\right\},$$

where $\mathcal{T}$ is a set of subsets of $[n]$ encoding multilinear expressions in a set of n binary variables. Integer programming formulations for $\mathrm{BMP}_n(\mathcal{T})$ are given by the inequalities in (2) or similar relaxations as discussed by Watters [36] or Glover and Woolsey [24]. Techniques to reduce the number of constraints in a specific relaxation of $\mathrm{BMP}_n(\mathcal{T})$ are discussed by Glover and Woolsey [23]. If $|\mathcal{T}| = 1$, the standard linearization is a complete linear description of $\mathrm{BMP}_n(\mathcal{T})$, but if $|\mathcal{T}| \geq 2$, it is not necessarily complete. Crama and Rodríguez-Heck [15] derive a family of inequalities that completely describe $\mathrm{BMP}_n(\mathcal{T})$ together with inequalities from the AND-linearization for every term in $\mathcal{T}$ if $|\mathcal{T}| \leq 2$. Using a hypergraph model to encode $\mathcal{T}$, Del Pia and Khajavirad [17, 18, 19] derive further facet defining inequalities of $\mathrm{BMP}_n(\mathcal{T})$ by exploiting hypergraph substructures. In particular, they show that the standard relaxation completely describes $\mathrm{BQP}_n(\mathcal{T})$ if and only if the hypergraph associated with $\mathcal{T}$ is Berge-acyclic. Balas and Mazzola [2] derive affine under- and overestimators for a multilinear expression without using the y-variables of $\mathrm{BMP}_n(\mathcal{T})$. Furthermore, for a given multilinear inequality, they provide a set of linear inequalities having the same binary solutions. Since this class of inequalities may be exponentially large, they also show dominance relations between these inequalities to reduce the number

of necessary inequalities [3]. To the best of our knowledge, the separation problem for these inequalities is NP-hard in general.

An alternative line of research is to introduce artificial variables for monomials that are not contained in $\mathcal{T}$, e.g., by splitting a monomial into several smaller ones and combining the variables of submonomials via AND-constraints as indicated in the introduction. This approach is widely used by practitioners and in solvers, see, e.g., Boros and Hammer [10], [6], or the Pseudo Boolean Competitions, e.g., [35]. Based on this idea, Buchheim and Rinaldi [11] show how arbitrary multilinear programs can be reduced to the quadratic case by introducing few new variables. Alternatively, each monomial $\{i_1, \dots, i_k\}$ in $\mathcal{T}$ can be reduced iteratively by one variable by introducing an auxiliary variable y that models the product $x_{i_1} \cdot \prod_{j=2}^{k} x_{i_j}$ and using McCormick inequalities to link y with both factors of this product. Since this relaxation does not exploit the structure of the set $\mathcal{T}$, the corresponding relaxation is typically weak. Luedtke et al. [29] investigate the difference of this linearization and the concave and convex envelopes of multilinear expressions, i.e., the strongest relaxation. In particular, they show that this difference can be arbitrarily large.

1.2. Contribution and Outline

Our main contribution is the analysis of polytopes of linearizations that use extra monomials in addition to the singleton and target monomials. Preliminary results on such linearizations are derived in Section 2, in which we restrict ourselves to a subclass of linearizations that involve only a reasonable number of additional monomials (in contrast to all monomial resultants of possible AND-constraints). For such linearizations, an associated digraph turns out to be helpful for the analysis. In Section 3, our first main result is presented, which is an integrality characterization for the corresponding relaxation polytopes (Theorem 9). The second main result, presented in Section 4, solves the problem of determining if extra monomials can be added in order to obtain an integral relaxation (Theorem 18). The latter problem is also addressed algorithmically in Theorem 32, which yields a polynomial-time algorithm to solve binary polynomial optimization problems, provided there exists a linearization whose digraph is acyclic in the undirected sense. In the final section, we give an outlook on further research directions.

2. Simple Linearizations and Their Digraphs

We consider polynomials in $\mathbb{R}[x_1, x_2, \dots, x_n]$ with variables x_1, x_2,..., x_n. As basic building blocks, we represent monomials by the index sets of their variables, i.e., $m \subseteq [n]$ encodes the monomial $m(x) := \prod_{i \in m} x_i$. The *target monomials* $\mathcal{T}$ are the monomials we are interested in, i.e., those appearing in the polynomial. The variables $x_1, \dots, x_n$ are identified with the variables for the *singleton monomials* $\mathcal{S} := \{\{i\} : i \in [n]\}$.

A *linearization*, denoted by $\mathcal{L} = (n, \mathcal{M}, \mathcal{A})$, consists of a set $\mathcal{M} \subseteq 2^{[n]}$ of monomials as well as a set $\mathcal{A}$ of AND-constraints. In order to model optimization problems over polynomials with binary variables $x_1, \dots, x_n$ and target monomials $\mathcal{T}$, we assume $\mathcal{M} \supseteq \mathcal{S} \cup \mathcal{T}$. Each AND-*constraint* $\mathcal{C} \in \mathcal{A}$ combines monomials m_1, m_2, ..., $m_k \in \mathcal{M}$ to a new monomial in $\mathcal{M}$. This monomial evaluates to 1 if and only if all variables of the combined monomials are 1. Thus, we write $\mathcal{C} := \{m_1, m_2, \dots, m_k\}$ and the resulting monomial is $\bigcup \mathcal{C} := m_1 \cup m_2 \cup \dots \cup m_k \in \mathcal{M}$. Throughout our paper, we denote by $\mathcal{M}^p := \mathcal{M} \setminus \mathcal{S}$ the *proper monomials*. Moreover, we only consider linearizations that are *consistent* in the sense that each proper monomial $m \in \mathcal{M}^p$ is the resultant of an AND-constraint, and that the monomials of that AND-constraint are proper subsets of m. In other words, there shall exist at least one constraint $\mathcal{C} \in \mathcal{A}$ with $m = \bigcup \mathcal{C}$ for each $m \in \mathcal{M}^p$ and $|m'| < |m|$ holds for each $m' \in \mathcal{C}$.

The *standard linearization* mentioned in the introduction is then given by $\mathcal{L} = (n, \mathcal{M}, \mathcal{A})$ with $\mathcal{M} = \mathcal{S} \cup \mathcal{T}$ and $\mathcal{A} = \{\{\{i\} : i \in m\} : m \in \mathcal{T}\}$. It has one constraint per target monomial, combining the singleton monomials contained in this target monomial.

A linearization $\mathcal{L} = (n, \mathcal{M}, \mathcal{A})$ induces a *relaxation* $P(\mathcal{L}) \subseteq \mathbb{R}^{\mathcal{M}}$, which is the polytope defined by the following inequalities on the binary variables y_m for all monomials $m \in \mathcal{M}$:

$$y_m \in [0,1] \qquad \text{for all } m \in \mathcal{M}, \tag{3a}$$

$$y_{\bigcup \mathcal{C}} \leq y_m \qquad \text{for all } \mathcal{C} \in \mathcal{A} \text{ and all } m \in \mathcal{C}, \text{ and} \tag{3b}$$

$$\sum_{m \in \mathcal{C}} y_m \leq y_{\bigcup \mathcal{C}} + |\mathcal{C}| - 1 \qquad \text{for all } \mathcal{C} \in \mathcal{A}. \tag{3c}$$

It is well known that constraints (3a)–(3c) correctly model products of binary variables, which is a consequence of the following result, which we provide for completeness.

Proposition 1. *Let $\mathcal{L} = (n, \mathcal{M}, \mathcal{A})$ be a linearization, and let $\mathcal{T} \subseteq \mathcal{M}^p$ be a subset of the proper monomials. A binary vector $y \in \{0,1\}^{\mathcal{S} \cup \mathcal{T}}$ can be extended to $y' \in P(\mathcal{L}) \cap \mathbb{Z}^{\mathcal{M}}$ if and only if $y_m = \prod_{i \in m} y_{\{i\}}$ holds for each monomial $m \in \mathcal{T}$.*

Proof. For sufficiency, we extend y to y' by setting $y'_m := \prod_{i \in m} y_{\{i\}} \in \{0,1\}$ for all monomials $m \in \mathcal{M}^p$. Clearly, y' extends y since $y'_m = y_m$ holds for all $m \in \mathcal{S} \cup \mathcal{T}$. Since y' is binary, it remains to verify that y' satisfies constraints (3b) and (3c). Let $\mathcal{C} \in \mathcal{A}$ be one of the constraints of $\mathcal{L}$ and let $m' := \bigcup \mathcal{C}$ be the resulting monomial. For each $m \in \mathcal{C}$ we have $m' \supseteq m$, which proves $y'_{m'} = \prod_{i \in m'} y'_{\{i\}} \leq \prod_{i \in m} y'_{\{i\}} = y'_m$, establishing (3b). To see that also (3c) is satisfied, assume, for the sake of contradiction, that $\sum_{m \in \mathcal{C}} y'_m > y'_{m'} + |\mathcal{C}| - 1$ holds. Since y' is binary, this implies $y'_m = 1$ for all $m \in \mathcal{C}$. This in turn implies $y'_{\{i\}} = 1$ for all $i \in m'$, and we obtain $y'_{m'} = 1$, a contradiction.

For necessity, let $y' \in P(\mathcal{L}) \cap \mathbb{Z}^{\mathcal{M}}$ extend a vector $y \in \{0,1\}^{\mathcal{S} \cup \mathcal{T}}$. Assume, for the sake of contradiction, that there exists a proper monomial $m' \in \mathcal{M}^p$ such that $y'_{m'} \neq \prod_{i \in m'} y'_{\{i\}}$ holds. We can assume m' to have minimal cardinality among all such monomials. By consistency of $\mathcal{L}$, there exists a constraint $\mathcal{C} \in \mathcal{A}$ with $m' = \bigcup \mathcal{C}$ such that $|m| < |m'|$ holds for each $m \in \mathcal{C}$. Hence, minimality of $|m'|$ ensures that $y'_m = \prod_{i \in m} y'_{\{i\}}$. It is easy to see that $y'_{m'} = \prod_{m \in \mathcal{C}} y'_m$ holds by constraints (3a)–(3c). We obtain $y'_{m'} = \prod_{m \in \mathcal{C}} \prod_{i \in m} y'_{\{i\}} = \prod_{i \in m'} y'_{\{i\}}$, where the last equation holds due to $y'_{\{i\}} \cdot y'_{\{i\}} = y'_{\{i\}}$. This contradicts our assumption and concludes the proof. □

In principle, linearizations admit that a (proper) monomial is the result of several AND-constraints. However, for practical purposes (e.g., the number of constraints), it is interesting to consider those linearizations in which each proper monomial is the result of *exactly one* AND-constraint. We call such linearizations *simple*. Note that this is equivalent to the requirement $|\mathcal{A}| = |\mathcal{M}^p|$.

The *digraph* associated with a simple linearization $\mathcal{L} = (n, \mathcal{M}, \mathcal{A})$ is a directed acyclic graph $D(\mathcal{L})$ having nodes for all monomials $m \in \mathcal{M}$. There is an arc from the node $\bigcup \mathcal{C}$ for each constraint $\mathcal{C} \in \mathcal{A}$ to each of its *child nodes* $m \in \mathcal{C}$. Note that a simple linearization is uniquely determined by its digraph. The *in-degree* of monomial $m \in \mathcal{M}$ is the number of AND-constraints $\mathcal{C} \in \mathcal{A}$ with $m \in \mathcal{C}$. Similarly, the *out-degree* of a monomial $\bigcup \mathcal{C} \in \mathcal{M}^p$ is $|\mathcal{C}|$ and 0 otherwise. A first simple property that can be expressed in terms of $D(\mathcal{L})$ is the following implication of consistency.

Proposition 2. *Let $\mathcal{L} = (n, \mathcal{M}, \mathcal{A})$ be a linearization and let $m \in \mathcal{M}$ be a monomial. Then for each $i \in m$, the digraph $D(\mathcal{L})$ contains at least one path from node m to the singleton node $\{i\} \in \mathcal{S}$.*

We close this section with an example that illustrates the structure of a linearization's digraph. We will use this example as a running example throughout this article to illustrate different properties of linearizations.

Example 3. Let $n = 6$ and consider the set of target monomials

$$\mathcal{T} = \big\{\{1,2,3,4\},\{3,4,5\},\{4,5,6\}\big\}.$$

Figure 1 shows the digraph of a simple linearization of $\mathcal{T}$, where singleton monomials are colored gray and target monomials are colored black. Throughout this article, we use the linearization corresponding to this digraph as a running example.

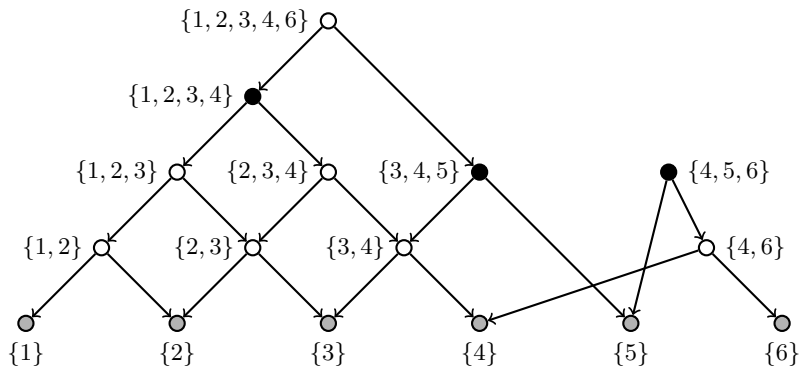

FIGURE 1. The linearization graph of a simple linearization corresponding to the target monomials from Example 3.

3. Integrality of Linearizations

We say that a linearization $\mathcal{L} = (n, \mathcal{M}, \mathcal{A})$ is *integral with respect to* $\mathcal{T} \subseteq \mathcal{M}^p$ if the projection of its relaxation $P(\mathcal{L})$ onto the variables y_m with $m \in \mathcal{S} \cup \mathcal{T}$ is an integral polytope. In this section, we will prove our first main result, a characterization of this property for simple linearizations in terms of $D(\mathcal{L})$. In fact, if the inequality system (3) defines an integral polytope for a given linearization, then it is totally dual integrality (TDI).

We first consider a single AND-constraint and establish the TDI property. Then we provide a preprocessing algorithm that removes redundant parts of a linearization. This algorithm motivates our integrality conditions whose sufficiency and necessity are proved in the last part of this section.

3.1. A Single AND-constraint

It is well known that (3) defines an integral polytope (see [1, 32] for the bilinear case and [14, 29] for the general case). To the best of our knowledge, however, it is not widely known that the corresponding system is TDI.

Proposition 4. *Let m be a monomial, and let $\mathcal{L}$ be the linearization that consists of the single* AND*-constraint for m. Then System (3) is TDI, and thus $P(\mathcal{L})$ is an integral polytope.*

Proof. Let $m = [n]$ and consider the standard linearization $\mathcal{L} = (n, \mathcal{S} \cup \{m\}, \{\mathcal{S}\})$. Let $(w, \bar{w}) \in \mathbb{Z}^n \times \mathbb{Z}$ be an arbitrary integral objective vector for (3). The dual of the corresponding maximization problem is

$$\min \quad (n-1)\beta + \sum_{i=1}^{n} \gamma_i + \delta$$

$$
\begin{aligned}
-\alpha_i + \beta + \gamma_i &\geq w_i, && \text{for all } i \in [n],\\
\sum_{i=1}^{n} \alpha_i - \beta + \delta &\geq \bar{w},\\
\alpha_i,\ \beta,\ \gamma_i,\ \delta &\geq 0, && \text{for all } i \in [n],
\end{aligned}
$$

where α_i corresponds to the i-th constraint of type (3b), β to (3c), and γ_i and δ to the upper bounds of $y_{\{i\}}$ and the resultant y_m, respectively. We will construct feasible integral solutions for (3) and its dual with the same objective value. To this end, define $S := \{i \in [n] : w_i \geq 0\}$ and choose $k \in \operatorname{argmin}\{w_i : i \in [n]\}$. All dual solutions will satisfy $\delta = 0$, and thus we omit it subsequently. We have the following case distinction on $(w, \bar{w})$ corresponding to different types of optimal solutions.

Case 1: $S = [n]$ and $w_k + \bar{w} \leq 0$.
Consider the primal solution with $y_{\{k\}} = y_m = 0$, $y_{\{i\}} = 1$ for all $i \in [n] \setminus \{k\}$, and the dual solution with $\alpha_i = 0$ and $\gamma_i = w_i - w_k$ for all $i \in [n]$ and $\beta = w_k$. Note for dual feasibility that $\sum_{i\in[n]} \alpha_i - \beta = 0 - w_k \geq \bar{w}$. Moreover, the common objective value is $(n-1)\beta + \sum_{i\in[n]} \gamma_i = (n-1)w_k + \sum_{i\in[n]} w_i - n \cdot w_k = \sum_{i\in[n]} w_i - w_k$.

Case 2: $S = [n]$ and $w_k + \bar{w} > 0$.
Consider the primal solution with $y_{\{i\}} = 1$ for all $i \in [n]$, $y_m = 1$, and the dual solution with $\alpha_i = 0$ and $\gamma_i = w_i + \min\{\bar{w}, 0\}$ for all $i \in [n] \setminus \{k\}$, $\alpha_k = \max\{\bar{w}, 0\}$, $\gamma_k = w_k + \bar{w}$ and $\beta = \max\{-\bar{w}, 0\}$. Note for dual feasibility that $\sum_{i\in[n]} \alpha_i - \beta = \max\{\bar{w}, 0\} - \max\{-\bar{w}, 0\} = \bar{w}$. Moreover, the common objective value is $(n-1)\beta + \sum_{i\in[n]} \gamma_i = (n-1)\max\{-\bar{w}, 0\} + \sum_{i\in[n]} w_i + (n-1)\min\{\bar{w}, 0\} + \bar{w} = \sum_{i\in[n]} w_i + \bar{w}$.

Case 3: $S \neq [n]$, $\sum_{i\in[n]\setminus S} w_i + \bar{w} \leq 0$.
Consider the primal solution with $y_{\{i\}} = 1$ for all $i \in S$, $y_{\{i\}} = 0$ for all $i \in [n] \setminus S$, $y_m = 0$, and the dual solution with $\alpha_i = \max\{-w_i, 0\}$ and $\gamma_i = \max\{w_i, 0\}$ for all $i \in [n]$ and $\beta = 0$. Note for dual feasibility that $\sum_{i\in[n]} \alpha_i - \beta = \sum_{i\in[n]\setminus S}(-w_i) - 0 \geq \bar{w}$. Moreover, the common objective value is $(n-1)\beta + \sum_{i\in[n]} \gamma_i = \sum_{i\in S} w_i$.

Case 4: $S \neq [n]$ and $\sum_{i\in[n]\setminus S} w_i + \bar{w} > 0$.
Consider the primal solution with $y_{\{i\}} = 1$ for all $i \in [n]$, $y_m = 1$, and the dual solution with $\alpha_k = \bar{w} - w_k + \sum_{i\in[n]\setminus S} w_i$, $\gamma_k = \bar{w} + \sum_{i\in[n]\setminus S} w_i$, $\alpha_i = 0$ and $\gamma_i = w_i$ for all $i \in S$, $\alpha_i = -w_i$ and $\gamma_i = 0$ for $i \in [n] \setminus (S \cup \{k\})$ as well as $\beta = 0$. Note for dual feasibility that $\sum_{i\in[n]} \alpha_i - \beta = (\bar{w} - w_k + \sum_{i\in[n]\setminus S} w_i) + \sum_{i\in[n]\setminus(S\cup\{k\})}(-w_i) = \bar{w}$. Moreover, the common objective value is $(n-1)\beta + \sum_{i\in[n]} \gamma_i = 0 + \bar{w} + \sum_{i\in[n]\setminus S} w_i + \sum_{i\in S} w_i = \sum_{i\in[n]} w_i + \bar{w}$.

This establishes TDI in every case and concludes the proof. □

Remark 5. In the proof of Proposition 4, each constructed dual solution has $\delta = 0$ and satisfies the constraints of the dual that correspond to variables $y_{\{i\}}$ with equality. Hence, the system (3) for a single AND-constraint is TDI even after removing the redundant constraints $y_{\bigcup \mathcal{C}} \leq 1$ and $y_{\{i\}} \geq 0$ for all $i \in [n]$.

Remark 6. For a single AND-constraint, the constraint matrix of system (3) is totally unimodular if and only if $|\mathcal{C}| = 2$. For $|\mathcal{C}| \geq 3$, it contains the submatrix

$$
\begin{pmatrix}
1 & -1 & 0 & 0\\
1 & 0 & -1 & 0\\
1 & 0 & 0 & -1\\
-1 & 1 & 1 & 1
\end{pmatrix}
$$

with determinant 2.

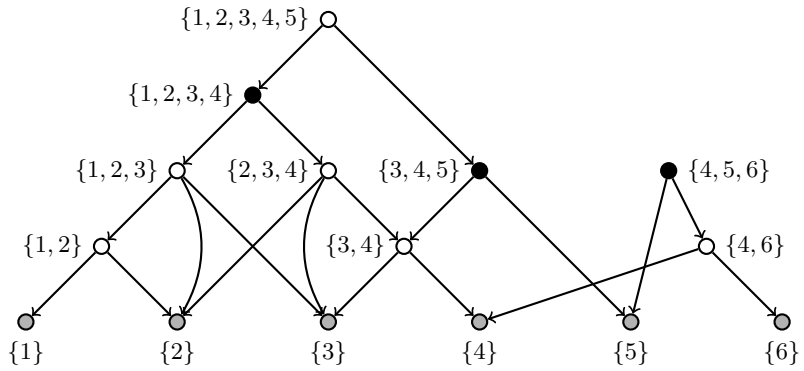

FIGURE 2. Example of the reduction step in Lemma 7 applied to monomial $m^\star = \{2, 3\}$ of the linearization from Example 3.

3.2. PREPROCESSING OF LINEARIZATIONS

A natural operation is the elimination of an auxiliary monomial. Its implications on the induced relaxations are stated in the next lemma; see Figure 2 for an illustration. To this end, for $M \subseteq \mathcal{M}$, we denote by $\operatorname{proj}_M(P(\mathcal{L}))$ the orthogonal projection of $P(\mathcal{L})$ onto the variables y_m with $m \in M$.

Lemma 7. *Let $\mathcal{L} = (n, \mathcal{M}, \mathcal{A})$ be a simple linearization. Consider a proper monomial $m^\star \in \mathcal{M}^p$ and the linearization $\mathcal{L}' = (n, \mathcal{M} \setminus \{m^\star\}, \mathcal{A}')$ for which $D(\mathcal{L}')$ arises from $D(\mathcal{L})$ by replacing every path of length 2 containing $m^\star$ as inner node by a single arc from the start of the path to its end, and finally removing $m^\star$ and its remaining incident arcs. Then $\operatorname{proj}_{\mathcal{M}\setminus\{m^\star\}}(P(\mathcal{L})) \subseteq P(\mathcal{L}')$, where equality holds if the in-degree of $m^\star$ in $D(\mathcal{L})$ is at most 1.*

Proof. Let $\mathcal{C}_1, \ldots, \mathcal{C}_k$ be all the constraints that contain $m^\star$. Since $\mathcal{L}$ is simple and consistent, there exists a unique constraint $\mathcal{C}^\star$ with $m^\star = \bigcup \mathcal{C}^\star$. In $\mathcal{L}'$, the constraints $\mathcal{C}_i$ are replaced with $\mathcal{C}_i' = \mathcal{C}^\star \cup \mathcal{C}_i \setminus \{m^\star\}$ for $i \in [k]$ and $\mathcal{C}^\star$ is removed. The only inequalities from (3) that constrain $y_{m^\star}$ are

$$\begin{aligned}
0 &\leq y_{m^\star}, \\
y_{\bigcup \mathcal{C}_i} &\leq y_{m^\star} && \text{for all } i \in [k], \\
\sum_{m \in \mathcal{C}^\star} y_m + 1 - |\mathcal{C}^\star| &\leq y_{m^\star}, \\
y_{m^\star} &\leq 1, \\
y_{m^\star} &\leq y_m && \text{for all } m \in \mathcal{C}^\star, \text{ and} \\
y_{m^\star} &\leq y_{\bigcup \mathcal{C}_i} + |\mathcal{C}_i| - 1 - \sum_{m \in \mathcal{C}_i \setminus \{m^\star\}} y_m && \text{for all } i \in [k].
\end{aligned}$$

By Fourier-Motzkin elimination [20, 22, 33], $\operatorname{proj}_{\mathcal{M}\setminus\{m^\star\}}(P(\mathcal{L}))$ is obtained by keeping all inequalities of $P(\mathcal{L})$ that do not involve $y_{m^\star}$ and by combining each of the first three inequalities above with each of the last three inequalities.

First, the combination of $y_{m^\star} \geq 0$ with one of the last three inequalities yields a redundant inequality. To see this for the combination with the last inequality (for some $i \in [k]$), observe that $y_{\bigcup \mathcal{C}_i} + |\mathcal{C}_i| - 1 - \sum_{m \in \mathcal{C}_i \setminus \{m^\star\}} y_m \geq 0 + |\mathcal{C}_i| - 1 - |\mathcal{C}_i \setminus \{m^\star\}| = 0$ holds due to the bound inequalities of the variables that appear. Second, the combination of $y_{m^\star} \leq 1$ with one of the first three inequalities yields a redundant inequality as well. To see this for the combination with the third inequality, observe that $\sum_{m \in \mathcal{C}^\star} y_m + 1 - |\mathcal{C}^\star| \leq 1$ holds

due to the bound inequalities of the variables that appear. Third, the combined inequality

$$\sum_{m' \in \mathcal{C}^\star} y_{m'} + 1 - |\mathcal{C}^\star| \leq y_m$$

for $m \in \mathcal{C}^\star$ is implied by inequalities $y_{m'} \leq 1$ for all $m' \in \mathcal{C}^\star \setminus \{m\}$. Fourth, the combined inequality $y_{\bigcup \mathcal{C}_i} \leq y_m$ for $i \in [k]$ and $m \in \mathcal{C}^\star$ corresponds to inequality (3b) for $\mathcal{L}'$, and the combined inequality

$$\begin{aligned} & \sum_{m \in \mathcal{C}^\star} y_m + 1 - |\mathcal{C}^\star| \leq y_{\bigcup \mathcal{C}_i} + |\mathcal{C}_i| - 1 - \sum_{m \in \mathcal{C}_i \setminus \{m^\star\}} y_m \\ \iff & \sum_{m \in \mathcal{C}^\star \cup \mathcal{C}_i \setminus \{m^\star\}} y_m \leq y_{\bigcup \mathcal{C}_i} + |\mathcal{C}^\star| + |\mathcal{C}_i| - 2 \\ \iff & \sum_{m \in \mathcal{C}'_i} y_m \leq y_{\bigcup \mathcal{C}'_i} + |\mathcal{C}'_i| - 1 \end{aligned}$$

corresponds to inequality (3c) for $\mathcal{L}'$ since $y_{\bigcup \mathcal{C}_i}$ is replaced by $y_{\bigcup \mathcal{C}'_i}$. This shows that all constraints in (3) for $\mathcal{L}'$ are implied. This establishes $\operatorname{proj}_{\mathcal{M} \setminus \{m^\star\}}(P(\mathcal{L})) \subseteq P(\mathcal{L}')$. The only remaining combined inequality is

$$y_{\bigcup \mathcal{C}_i} \leq y_{\bigcup \mathcal{C}_j} + |\mathcal{C}_j| - 1 - \sum_{m \in \mathcal{C}_j \setminus \{m^\star\}} y_m$$

for $i, j \in [k]$. For $i = j$, it is equivalent to the sum of the inequalities $y_m \leq 1$ for all $m \in \mathcal{C}_i \setminus \{m^\star\}$, and thus redundant. This proves $\operatorname{proj}_{\mathcal{M} \setminus \{m^\star\}}(P(\mathcal{L})) = P(\mathcal{L}')$ for $k \leq 1$ since $i = j$ must hold (if such constraints exist at all) in this case. This proves the second statement of the lemma. □

One application of Lemma 7 is a preprocessing step that eliminates redundant parts of a simple linearization if the set of target monomials is a proper subset of $\mathcal{M}^p$. To this end, given a digraph $D = (V, A)$ and $W \subseteq V$, $succ(W)$ shall denote the set of nodes reachable from any node in W including the nodes from W. For $w \in V$ we abbreviate $succ(w) := succ(\{w\})$. Similarly, $pred(W)$ (resp. $pred(w)$) shall denote the set of nodes from which one can reach a node in W (resp. node w) including W (resp. w).

Corollary 8. *Let $\mathcal{L} = (n, \mathcal{M}, \mathcal{A})$ be a simple linearization, and let $\mathcal{T} \subseteq \mathcal{M}^p$ be a subset of the proper monomials. Then*

$$\mathcal{L}' := (n, \mathcal{M}', \mathcal{A}') \text{ with } \mathcal{M}' := \mathcal{S} \cup succ(\mathcal{T}) \text{ and } \mathcal{A}' := \left\{ \mathcal{C} \in \mathcal{A} : \bigcup \mathcal{C} \in \mathcal{M}' \right\}$$

is a simple linearization that satisfies $P(\mathcal{L}') = proj_{\mathcal{M}'}(P(\mathcal{L}))$. Moreover, $\mathcal{L}'$ can be computed in linear time in the size of $\mathcal{L}$.

Proof. It is easy to check that $\mathcal{L}'$ is indeed a linearization. The fact that it is simple is inherited from $\mathcal{L}$. Moreover, the projection of $P(\mathcal{L}')$ onto the variables $\mathcal{M}'$ is equal to $P(\mathcal{L})$ by Lemma 7, since we can carry out the removal of monomials sequentially, always considering a monomial $m^\star \notin succ(\mathcal{T})$ that has in-degree 0. Finally, $\mathcal{L}'$ can be computed in linear time, since $succ(\mathcal{T})$ can be computed by breadth-first search in $D(\mathcal{L})$. □

By Proposition 1, a simple linearization $\mathcal{L} = (n, \mathcal{M}, \mathcal{A})$ yields an integer programming formulation of $\mathrm{BMP}_n(\mathcal{T})$ with auxiliary variables. If we are interested in deciding whether the relaxation in fact projects to a complete linear description of $\mathrm{BMP}_n(\mathcal{T})$, Corollary 8 shows that it is sufficient to consider linearizations in which every monomial is a successor of a target monomial. Thus, we can avoid unnecessarily complicated linearizations.

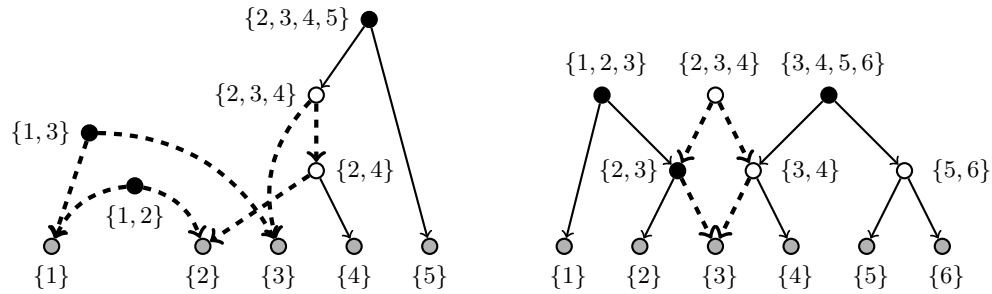

(a) The dashed cycle destroys integrality according to Theorem 9. Note that $\{2,3,4\}$ and $\{2,4\}$ are in $succ(\mathcal{T})$ due to $\{2,3,4,5\} \in \mathcal{T}$.

(b) The only (undirected) cycle is dashed. Due to $\{2,3,4\} \notin succ(\mathcal{T})$, the projection onto the variables for $\mathcal{S}$ and $\mathcal{T}$ is integral.

FIGURE 3. The role of cycles in Theorem 9. Black nodes are those in $\mathcal{T}$. Both graphs contain exactly one cycle. However, the projection is not integral for the linearization in Figure 3a, while it is integral for that in Figure 3b.

3.3. Characterization of Integrality

Let $G(D)$ denote the undirected version of a digraph D. Moreover, for a digraph D and a graph G, we denote their node sets by $V(D)$ and $V(G)$, respectively. In order to characterize integral simple linearizations, we consider subgraphs Z of D whose underlying undirected graph $G(Z)$ is a cycle. Note that in this article, cycles are always *simple*, i.e., each node appears in exactly two edges of the cycle.

We can now state our first main result.

Theorem 9. *Let $\mathcal{L} = (n, \mathcal{M}, \mathcal{A})$ be a simple linearization, and let $\mathcal{T} \subseteq \mathcal{M}^p$ be a subset of the proper monomials. Then $\text{proj}_{\mathcal{S}\cup\mathcal{T}}(P(\mathcal{L}))$ is integral if and only if $D(\mathcal{L})$ does not contain a subgraph Z that satisfies*

(a) $G(Z)$ is a cycle, and
(b) $V(Z) \subseteq succ(\mathcal{T})$.

Moreover, if the projection is integral and $\mathcal{M}^p \subseteq succ(\mathcal{T})$ holds, then system (3a)–(3c) is TDI.

The role of the subgraph Z in Theorem 9 is illustrated in Figure 3. As an immediate consequence we obtain the following result.

Corollary 10. *Let $\mathcal{L} = (n, \mathcal{M}, \mathcal{A})$ be a simple linearization. Then the following statements are equivalent:*

(i) $P(\mathcal{L})$ is integral.
(ii) $G(D(\mathcal{L}))$ is acyclic.
(iii) System (3a)–(3c) is TDI.

Proof. By choosing $\mathcal{T} := \mathcal{M}^p$ we have $\text{proj}_{\mathcal{S}\cup\mathcal{T}}(P(\mathcal{L})) = P(\mathcal{L})$. In this case, Property (b) of Theorem 9 is always satisfied due to $V(Z) \setminus \mathcal{S} \subseteq \mathcal{M}^p = \mathcal{T} \subseteq succ(\mathcal{T})$. The theorem then implies the equivalence of (i) and (ii) and the implication of (iii) by (i). The reverse implication is clear due to the integral right-hand side of system (3a)–(3c). □

Remark 11. Another consequence of Theorem 9 is that we can test in linear time whether a given simple linearization is integral, or, more generally, whether a given orthogonal projection onto a subset of variables (that contains all singletons) is integral.

The next two subsections are dedicated to the proof of Theorem 9.

3.4. Sufficiency

In this section, we prove one direction of Theorem 9 by showing that Properties (a) and (b) are sufficient for integrality of the corresponding projection. We first prove an auxiliary result, showing that a combination of certain TDI systems results in a TDI system. Since AND-relaxations of single monomials are TDI by Proposition 4, this result will allow us to deduce integrality of $P(\mathcal{L})$, provided $G(D(\mathcal{L}))$ is essentially acyclic.

Proposition 12. *For $i \in [2]$, let $A^i x^i + b^i y \leq d^i$ be totally dual integral inequality systems that each imply $0 \leq y \leq 1$, where $A^i \in \mathbb{Z}^{m_i \times n_i}$ and b^i, $d^i \in \mathbb{Z}^{m_i}$. Then also the combined inequality system*

$$\begin{aligned} A^1 x^1 \qquad\quad + b^1 y &\leq d^1 \\ A^2 x^2 + b^2 y &\leq d^2 \end{aligned}$$

is TDI.

Proof. Consider an objective vector $(c^1, c^2, \delta) \in \mathbb{Z}^{n_1} \times \mathbb{Z}^{n_2} \times \mathbb{Z}$ for which the combined inequality system attains an optimal solution. Let, for $i \in [2]$ and $k \in \{0, 1\}$,

$$z^i_k := \sup \left\{ (c^i)^\top x : A^i x + b^i y \leq d^i \text{ and } y = k \right\} \in \mathbb{R} \cup \{\pm\infty\}.$$

Due to $0 \leq y \leq 1$, the feasible region of each of these four LPs is a face of an integral polyhedron, which implies $z^i_k \in \mathbb{Z} \cup \{\pm\infty\}$.

Suppose (at least) one of the values is $-\infty$, say z^1_0. If also $z^1_1 = -\infty$, the first system is infeasible and thus the same holds for the combined system. Otherwise, the first system implies $y = 1$. We can now project y out of the first system and consider the face defined by $y = 1$ for the second system. This maintains TDIness as well as the feasible region of the combined system. The resulting polyhedron is a Cartesian product of two polyhedra that are defined by TDI inequality systems, proving that the combined system is TDI.

Consequently, we can assume that $z^i_k \neq -\infty$ for all i and k in the following. If one of the values, say z^1_k, is ∞, then there exists an unbounded ray $(r, p) \in \mathbb{R}^{n_1} \times \mathbb{R}$ with $(c^1)^\top r + \delta p > 0$. From $0 \leq y \leq 1$, we obtain $p = 0$. This shows that $(r, \mathbb{O}, 0)$ is an unbounded ray in the combined system and satisfies $(c^1)^\top r + (c^2)^\top \mathbb{O} + \delta 0 > 0$. This contradicts our assumption that the objective (c^1, c^2, δ) is bounded over the combined system.

Otherwise, all four values are finite. Then, for δ_1, $\delta_2 \in \mathbb{R}$, consider the finite values

$$\bar{z}^i := \max \left\{ (c^i)^\top x + \delta_i \cdot y : \; A^i x + b^i y \leq d^i \right\}. \tag{4}$$

Note that if $\delta_i \geq z^i_0 - z^i_1$, then $\bar{z}^i$ is attained at a vector with $y = 1$, because we have $\bar{z}^i \geq \max\{z^i_0, z^i_1 + \delta_i\} \geq z^i_0$. Similarly, if $\delta_i \leq z^i_0 - z^i_1$, then $\bar{z}^i$ is attained at a vector with $y = 0$.

If $z^1_0 - z^1_1 + z^2_0 - z^2_1 \geq \delta$ holds, then choose $\delta_1 := z^1_0 - z^1_1$ and $\delta_2 := \delta - \delta_1 \leq z^2_0 - z^2_1$. Hence, $\bar{z}^i$ is attained by $(\bar{x}^i, \bar{y})$ with $\bar{x}^i \in \mathbb{Z}^{n_i}$ and $\bar{y} = 0$ for both $i \in [2]$.

Otherwise, i.e., if $z^1_0 - z^1_1 + z^2_0 - z^2_1 < \delta$ holds, then choose $\delta_1 := z^1_0 - z^1_1$ and $\delta_2 := \delta - \delta_1 \geq z^2_0 - z^2_1$. Then $\bar{z}^i$ is attained by $(\bar{x}^i, \bar{y})$ with $\bar{x}^i \in \mathbb{Z}^{n_i}$ and $\bar{y} = 1$ for both $i \in [2]$.

In both cases, this shows that $(\bar{x}^1, \bar{x}^2, \bar{y})$ is a maximum for the combined system with respect to (c^1, c^2, δ). Hence, by integrality of the data and total dual integrality of each of the systems, there exist dual multipliers $\lambda^i \in \mathbb{Z}^{m_i}_+$ with

$$(\lambda^i)^\top A^i = (c^i)^\top, \quad (\lambda^i)^\top b^i = \delta_i, \quad (\lambda^i)^\top d^i = (c^i)^\top \bar{x}^i + \delta_i \cdot \bar{y}.$$

Thus, $(\lambda^1)^\top d^1 + (\lambda^2)^\top d^2 = (c^1)^\top \bar{x}^1 + (c^2)^\top \bar{x}^2 + \delta \cdot \bar{y}$, i.e., (λ^1, λ^2) is an integral optimum for the dual of the LP over the combined system. This concludes the proof. □

Lemma 13. *Let $\mathcal{L} = (n, \mathcal{M}, \mathcal{A})$ be a simple linearization. If $G(D(\mathcal{L}))$ is acyclic, then system (3a)–(3c) is TDI.*

Proof. We prove the statement by induction on the number $|\mathcal{A}|$ of constraints. For $\mathcal{A} = \varnothing$, consistency of $\mathcal{L}$ implies that $\mathcal{M} = \mathcal{S}$, and hence $P(\mathcal{L}) = [0,1]^n$.

If $G(D(\mathcal{L}))$ has more than one connected component, $P(\mathcal{L})$ is the Cartesian product of polytopes of smaller linearizations, whose inequality systems (3a)–(3c) are TDI as well as the combined inequality system. Thus, we assume that $G(D(\mathcal{L}))$ is connected.

If $\mathcal{A} \neq \varnothing$, we choose a constraint $\mathcal{C}^\star \in \mathcal{A}$ such that its corresponding monomial $m^\star := \bigcup \mathcal{C}^\star$ has in-degree 0. We consider the linearization $\mathcal{L}' := (n, \mathcal{M}', \mathcal{A}')$ with $\mathcal{M}' := \mathcal{M} \setminus \{m^\star\}$ and $\mathcal{A}' := \mathcal{A} \setminus \{\mathcal{C}^\star\}$. Clearly, $\mathcal{L}'$ satisfies the assumption of the lemma, since $D(\mathcal{L}')$ is a subgraph of $D(\mathcal{L})$. By connectivity and acyclicity of $G(D(\mathcal{L}))$, the graph obtained from $G(D(\mathcal{L}))$ by removing node $m^\star$ consists of $|\mathcal{C}^\star|$-many connected components, each of which contains a node corresponding to some monomial $m \in \mathcal{C}^\star$. Let $\mathcal{L}_m$ be the linearization whose graph $G(D(\mathcal{L}_m))$ is the connected component containing node $m \in \mathcal{C}^\star$. By the induction hypothesis, the inequality system (3a)–(3c) for $\mathcal{L}_m$ is TDI.

Consider the polytope $P \subseteq \mathbb{R}^{\mathcal{C}^\star} \times \mathbb{R}$ with variables $y_m \in [0,1]$ for each $m \in \mathcal{C}^\star$ as well as $y_{m^\star} \in [0,1]$ defined by inequalities (3b) and (3c) for constraint $\mathcal{C}^\star$. By Proposition 4, the system is TDI and P is integral. Observe that P has exactly one variable in common with the polytopes $P(\mathcal{L}_m)$ for each $m \in \mathcal{C}^\star$. By repeated application of Proposition 12, the combined system (which is system (3a)–(3c) for $\mathcal{L}$) is TDI. This concludes the proof. □

Lemma 13 is the main ingredient for the sufficiency direction of Theorem 9. Property (b) of the theorem is used to replace the considered linearization $\mathcal{L}$ by an equivalent one whose graph is acyclic.

Sufficiency proof for Theorem 9. Let $\mathcal{L} = (n, \mathcal{M}, \mathcal{A})$ be a simple linearization and $\mathcal{T} \subseteq \mathcal{M}^p$ be a subset of the proper monomials. Assume that $D(\mathcal{L})$ does not contain a subgraph Z satisfying Properties (a) and (b). We have to show that $\operatorname{proj}_{\mathcal{S}\cup\mathcal{T}}(P(\mathcal{L}))$ is integral, and, if in addition $\mathcal{M}^p \subseteq succ(\mathcal{T})$ holds, that system (3a)–(3c) is TDI.

To this end, consider the linearization $\mathcal{L}' = (n, \mathcal{M}', \mathcal{A}')$ with $\mathcal{M}' := \mathcal{S} \cup succ(\mathcal{T})$ defined in Corollary 8. Note that the construction is such that $\mathcal{M}'$ contains all target monomials $\mathcal{T}$. The corollary states that $P(\mathcal{L}') = \operatorname{proj}_{\mathcal{M}'}(P(\mathcal{L}))$ holds. Moreover, our assumption that $D(\mathcal{L})$ does not contain a subgraph Z satisfying Properties (a) and (b) implies that $G(D(\mathcal{L}'))$ is acyclic. Thus, by Lemma 13, system (3a)–(3c) for $\mathcal{L}'$ is TDI. This already proves the second statement, since $\mathcal{M}' = \mathcal{M}$ holds in case $\mathcal{M}^p \subseteq succ(\mathcal{T})$ holds.

Since the right-hand side of the system is integer, $P(\mathcal{L}')$ is integral, which implies integrality of $\operatorname{proj}_{\mathcal{S}\cup\mathcal{T}}(P(\mathcal{L}'))$. We obtain

$$\operatorname{proj}_{\mathcal{S}\cup\mathcal{T}}(P(\mathcal{L})) = \operatorname{proj}_{\mathcal{S}\cup\mathcal{T}}(\operatorname{proj}_{\mathcal{M}'}(P(\mathcal{L}))) = \operatorname{proj}_{\mathcal{S}\cup\mathcal{T}}\left(P(\mathcal{L}')\right),$$

where the second equation holds by Corollary 8, noting that $\mathcal{S} \cup \mathcal{T} \subseteq \mathcal{M}'$ holds. This establishes integrality of $\operatorname{proj}_{\mathcal{S}\cup\mathcal{T}}(P(\mathcal{L}))$ and concludes the proof. □

Remark 14. The integrality implications of Proposition 4 and of Proposition 12 are well known (see [21] for a short direct proof and [13, 31] for the more general concept of the "projected faces property"). Hence, the sufficiency proof for the integrality property essentially reduces to Corollary 8 and Lemma 13 if one exploits this knowledge. However, we established the TDI property of the corresponding inequality systems, which is a stronger result.

3.5. Necessity

We now present the other direction of the proof of Theorem 9. To this end we show that the presence of subgraphs Z of $D(\mathcal{L})$ fulfilling Properties (a) and (b) in Theorem 9 implies fractionality of $P(\mathcal{L})$. We will consider subgraphs of $D(\mathcal{L})$ and $G(D(\mathcal{L}))$. If we are given a path in $D(\mathcal{L})$ or $G(D(\mathcal{L}))$, we always assume that it is given by its arcs or edges, respectively.

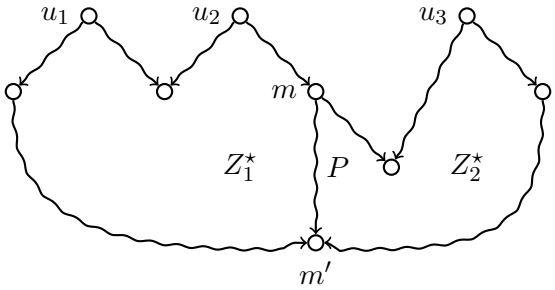

FIGURE 4. Illustration of a shortcut path in the proof of Lemma 15. Here, $U(Z_1^\star) = U(Z_1^\star \cup P) = \{u_1, u_2\}$, $U(Z_2^\star) = \{u_3\}$ and $U(Z_2^\star \cup P) = \{u_3, m\}$ hold.

For subgraphs Z of D, let $U(Z) \subseteq V(Z)$ be the set of nodes with out-degree at least 2 in the subgraph Z, called *upper nodes*, and let $L(Z) \subseteq V(Z)$ be the nodes with in-degree at least 2 in the subgraph Z, called *lower nodes*. Note that if $G(Z)$ is a cycle, then $|U(Z)| = |L(Z)|$ holds. Moreover, in this case the requirement "$V(Z) \subseteq succ(\mathcal{T})$" in Theorem 9 is equivalent to "$U(Z) \subseteq succ(\mathcal{T})$" since $V(Z) \subseteq succ(U(Z))$ holds. In Figure 3a, $U(Z) = \{\{1,2\},\{1,3\},\{2,3,4\}\}$ and $L(Z) = \{\{1\},\{2\},\{3\}\}$ hold, while in Figure 3b, we have $U(Z) = \{\{2,3,4\}\}$ and $L(Z) = \{\{3\}\}$.

Lemma 15. *Let $\mathcal{L} = (n, \mathcal{M}, \mathcal{A})$ be a simple linearization, and let $\mathcal{T} \subseteq \mathcal{M}^p$ be a subset of the proper monomials. If $D(\mathcal{L})$ has a subgraph that satisfies Properties (a) and (b) of Theorem 9, then $D(\mathcal{L})$ has a subgraph Z satisfying Properties (a) and (b) and $|U(Z)| = 1$ or the following three properties:*

(c) for all $s \in \mathcal{S}$, $t \in \mathcal{T}$, there is at most one t-s-path,
(d) $|pred(s) \cap L(Z)| \leq 1$ for all $s \in \mathcal{S}$,
(e) $|succ(t) \cap U(Z)| \leq 1$ for all $t \in \mathcal{T}$.

Proof. Let $Z^\star$ be a subgraph satisfying Properties (a) and (b) with minimal $|U(Z^\star)|$. Since $D(\mathcal{L})$ is acyclic and $G(Z^\star)$ is a cycle, we have $|U(Z^\star)| \geq 1$. If $|U(Z^\star)| = 1$, we are done, so we assume from now on that $|U(Z^\star)| \geq 2$ holds. We claim that $Z^\star$ also satisfies Properties (c)–(e).

To prove Property (c), assume that for some $t \in \mathcal{T}$ and some $s \in \mathcal{S}$, there are two distinct t-s-paths P_1 and P_2 in $D(\mathcal{L})$. Then the symmetric difference of P_1 and P_2 contains a subgraph Z' that consists of two internally node-disjoint paths having the same start node and the same terminal node. Clearly, Z' satisfies Property (a) and (b), since t is a predecessor of all nodes in $V(Z') \supseteq U(Z')$. The construction implies $|U(Z')| = 1$, contradicting our assumption.

Before proving Property (d) and (e), we show that there is no directed path in $D(\mathcal{L})$ between two distinct nodes of $V(Z^\star)$ that is arc-disjoint with $Z^\star$, see Figure 4 for an illustration. We will subsequently call such a path a *shortcut path*. Assume for the sake of contradiction that P is such a path from node m to m'. The two nodes m and m' induce a partition of $Z^\star$ into two distinct subgraphs $Z_1^\star$ and $Z_2^\star$ such that $G(Z_1^\star)$ and $G(Z_2^\star)$ are paths in $G(Z^\star)$ connecting m and m'. Then, for $i \in [2]$, $G(Z_i^\star \cup P)$ is a cycle. Since P is a directed path, it can only induce one more node (namely m) into $U(Z^\star)$, i.e. $|U(Z_i^\star \cup P)| \leq |U(Z_i^\star)| + 1$, but only one case can attain equality. Moreover, one $Z_i^\star$ contains at most half of the nodes of $U(Z^\star)$. Since $|U(Z^\star)| \geq 2$ it follows that $|U(Z_i^\star \cup P)| < |U(Z^\star)|$ for one $i \in [2]$. Moreover, when following m backwards in $Z^\star$, we reach a node $u \in U(Z^\star)$. By assumption on $Z^\star$, $U(Z^\star) \subseteq succ(\mathcal{T})$. Thus, the same holds for $Z_i^\star \cup P$, i.e., Property (b) holds for $Z_i^\star \cup P$. This contradicts our minimality assumption on the choice of $Z^\star$.

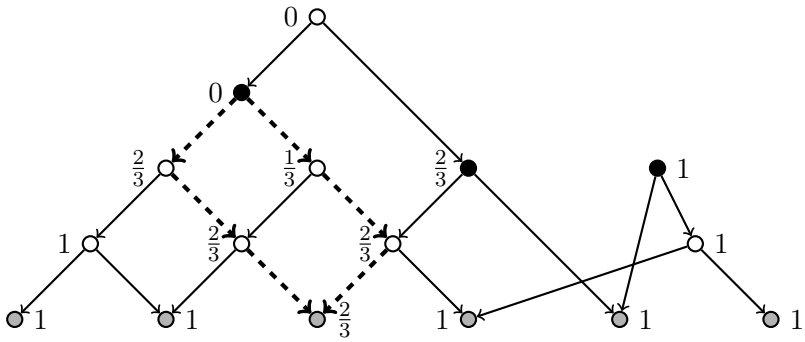

FIGURE 5. The point y constructed in the proof of Lemma 16 w.r.t. the dashed cycle in the linearization of Example 3.

To prove Property (d), assume that there exists a singleton $s \in \mathcal{S}$ and two distinct monomials ℓ_1, $\ell_2 \in pred(s) \cap L(Z^\star)$ with corresponding ℓ_1-s-path P_1 and ℓ_2-s-path P_2 in $D(\mathcal{L})$, respectively. There exists a node $m \in V(P_1) \cap V(P_2)$ such that P_1 and P_2 contain arc-disjoint ℓ_1-m- and ℓ_2-m-paths P_1' and P_2', respectively. Moreover, P_1' and P_2' are arc-disjoint from $Z^\star$, since they would otherwise induce a shortcut path. The two nodes ℓ_1, $\ell_2 \in V(Z^\star)$ induce a partition of $Z^\star$ into two distinct subgraphs $Z_1^\star$ and $Z_2^\star$ such that $G(Z_1^\star)$ and $G(Z_2^\star)$ are paths in $G(Z^\star)$ connecting ℓ_1 and ℓ_2. Clearly, $U(Z_1^\star) \cap U(Z_2^\star) = \varnothing$ holds. We assume w.l.o.g. $U(Z_1^\star) \subset U(Z^\star)$. Consider the subgraph $Z' := P_1' \cup P_2' \cup Z_1^\star$, and observe that $G(Z')$ is a cycle, since P_1', P_2' and $Z_1^\star$ are disjoint by construction. Since ℓ_1, $\ell_2 \in L(Z^\star)$, Z' does not add nodes to $U(Z_1^\star)$. Thus, $U(Z') = U(Z_1^\star) \subset U(Z^\star)$ holds, which implies Property (b) for Z'. Then $|U(Z')| < |U(Z^\star)|$ contradicts our minimality assumption on $|U(Z^\star)|$ and establishes Property (d) for $Z^\star$.

The proof for Property (e) is similar. Assume that there exists a target monomial $t \in \mathcal{T}$ and two distinct monomials u_1, $u_2 \in succ(t) \cap U(Z^\star)$ with corresponding t-u_1-path P_1 and t-u_2-path P_2 in $D(\mathcal{L})$. There exists a node $m \in V(P_1) \cap V(P_2)$ such that P_1 and P_2 contain arc-disjoint m-u_1- and m-u_2-paths P_1' and P_2', respectively. Moreover, P_1' and P_2' are arc-disjoint from $Z^\star$, since they would otherwise induce a shortcut path. The two nodes u_1, $u_2 \in V(Z^\star)$ induce a partition of $Z^\star$ into two disjoint subgraphs $Z_1^\star$ and $Z_2^\star$ such that $G(Z_1^\star)$ and $G(Z_2^\star)$ are paths in $G(Z^\star)$ connecting u_1 and u_2. Observe that $G(Z')$ is a cycle for the subgraph $Z' := Z_1^\star \cup P_1' \cup P_2'$, since P_1', P_2' and $Z_1^\star$ are disjoint by construction. Since m is a predecessor of both u_1 and u_2 in $D(\mathcal{L})$, neither u_1 nor u_2 can be in $U(Z')$. Thus, $U(Z') \subseteq (U(Z^\star) \cup \{m\}) \setminus \{u_1, u_2\}$ holds, which implies Property (b) for Z', since $t \in pred(m) \cap \mathcal{T}$. It also implies $|U(Z')| < |U(Z^\star)|$, which contradicts our minimality assumption on $|U(Z^\star)|$ and establishes Property (e) for $Z^\star$. □

Lemma 16. *Let $\mathcal{L} = (n, \mathcal{M}, \mathcal{A})$ be a simple linearization and let $\mathcal{T} \subseteq \mathcal{M}^p$ be a subset of the proper monomials. If $D(\mathcal{L})$ has a subgraph Z that satisfies (a), (b) and $|U(Z)| = 1$, then $proj_{\mathcal{S} \cup \mathcal{T}}(P(\mathcal{L}))$ is not integral.*

Proof. Let Z be as stated in the lemma, and let $t \in \mathcal{T}$ be such that there exists a t-u-path in $D(\mathcal{L})$, where $u \in U(Z)$. Let $\ell \in L(Z)$ and $s \in \mathcal{S} \cap succ(\ell)$. Note that since $|U(Z)| = |L(Z)| = 1$ holds, u and ℓ are unique. For $m \in \mathcal{M}$, we denote by $k(m) \in \mathbb{Z}_+$ the number of distinct m-s-paths in $D(\mathcal{L})$. Clearly, Z consists of two directed u-ℓ-paths that can be extended to u-s-paths in $D(\mathcal{L})$, which proves $k(u) \geq 2$. Note that all $\mathcal{C} \in \mathcal{A}$ satisfy

$$k(\bigcup \mathcal{C}) = \sum_{m \in \mathcal{C}} k(m), \tag{5}$$

since the $\bigcup \mathcal{C}$-s paths are exactly those paths that start with some arc $(\bigcup \mathcal{C}, m)$ (with $m \in \mathcal{C}$) and continue with some m-s-path. Moreover, we have $k(\hat{s}) = 0$ for each $\hat{s} \in \mathcal{S} \setminus \{s\}$

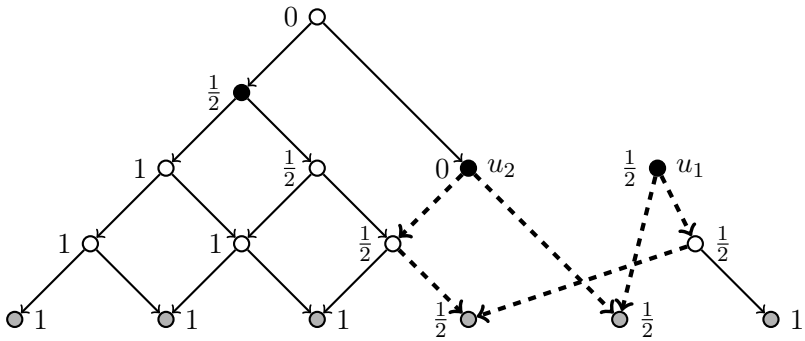

FIGURE 6. The point y constructed in the proof of Lemma 17 w.r.t. the dashed cycle in the linearization of Example 3.

as well as $k(s) = 1$. We define the point $y \in \mathbb{R}^{\mathcal{M}}$ via

$$y_m \coloneqq \max\left\{0,\ 1 - \tfrac{k(m)}{k(u)}\right\} \qquad \text{for each monomial } m \in \mathcal{M}.$$

Figure 5 shows the constructed point y for the running Example 3. Observe that $y_{\hat{s}} = 1$ for each $\hat{s} \in \mathcal{S} \setminus \{s\}$, since $k(\hat{s}) = 0$. Moreover, $y_s = 1 - 1/k(u) \in (0, 1)$ holds. Finally, since the $k(u)$-many distinct u-s-paths induce at least $k(u)$-many t-s-paths, we have $k(t) \geq k(u)$. Thus, y_t is the maximum of 0 and $1 - k(t)/k(u) \leq 1 - k(u)/k(u) = 0$. Hence, $y_t = 0$.

We now prove that $y \in P(\mathcal{L})$. By construction, $y \in [0, 1]^{\mathcal{M}}$. Consider a constraint $\mathcal{C} \in \mathcal{A}$, and let $m' \coloneqq \bigcup \mathcal{C}$. For each $m \in \mathcal{C}$, we have $k(m') \geq k(m)$ since (m', m) is an arc in $D(\mathcal{L})$. If $y_m = 0$, we have $k(m') \geq k(m) \geq k(u)$, which implies $y_{m'} = 0$. Otherwise, if $y_{m'} > 0$ then $y_{m'} = 1 - k(m')/k(u) \leq 1 - k(m)/k(u) = y_m$. We conclude that (3b) holds for each $m \in \mathcal{C}$. If $y_m = 0$ for some $m \in \mathcal{C}$, then (3c) is clearly satisfied. Otherwise we have

$$\sum_{m \in \mathcal{C}} y_m = |\mathcal{C}| - \sum_{m \in \mathcal{C}} \frac{k(m)}{k(u)} \underset{(5)}{=} |\mathcal{C}| - \frac{k(m')}{k(u)} = 1 - \frac{k(m')}{k(u)} + |\mathcal{C}| - 1 = y_{m'} + |\mathcal{C}| - 1.$$

Thus, (3c) is satisfied.

Consider the projection $y' \in \operatorname{proj}_{\mathcal{S} \cup \mathcal{T}}(y)$ of y and assume that y' lies in the polytope $Q \coloneqq \operatorname{conv}(\operatorname{proj}_{\mathcal{S} \cup \mathcal{T}}(P(\mathcal{L})) \cap \mathbb{Z}^{\mathcal{S} \cup \mathcal{T}})$. Then y' is the convex combination of integer points $y^{(1)}, y^{(2)}, \ldots, y^{(q)} \in Q \cap \mathbb{Z}^{\mathcal{S} \cup \mathcal{T}}$. By construction of y, the integer points have to satisfy $y_t^{(k)} = 0$ and $y_{\hat{s}}^{(k)} = 1$ for all $\hat{s} \in \mathcal{S} \setminus \{s\}$ for all $k \in [q]$. This implies $y_s^{(k)} = 0$ for every $k \in [q]$, because otherwise, $y_t^{(k)}$ has to be 1. Thus, $y'_s = 0$, a contradiction. This proves that the fractional point y' does not lie in Q, i.e., $\operatorname{proj}_{\mathcal{S} \cup \mathcal{T}}(P(\mathcal{L}))$ is not integral. □

Lemma 17. *Let $\mathcal{L} = (n, \mathcal{M}, \mathcal{A})$ be a simple linearization and let $\mathcal{T} \subseteq \mathcal{M}^p$ be a subset of the proper monomials. If $D(\mathcal{L})$ has a subgraph Z that satisfies Properties (a)–(e) and $|U(Z)| > 1$, then $\operatorname{proj}_{\mathcal{S} \cup \mathcal{T}}(P(\mathcal{L}))$ is not integral.*

Proof. Let Z be a subgraph of D as stated in the lemma. Let $U(Z) = \{u_1, u_2, \ldots, u_k\}$ and $L(Z) = \{\ell_1, \ell_2, \ldots, \ell_k\}$ with $k > 1$. We assume the these nodes are ordered such that Z contains a path from u_i to ℓ_i for $i \in [k]$, paths from u_i to ℓ_{i+1} for $i \in [k-1]$ as well as a path from u_k to ℓ_1. For $i \in [k]$, choose $s_i \in \mathcal{S} \cap succ(\ell_i)$, which exists by Proposition 2. Similarly, for $i \in [k]$, choose $t_i \in \mathcal{T} \cap pred(u_i)$, which is guaranteed to exist by Property (b). Due to $\mathcal{T} \cap \mathcal{S} = \varnothing$ and since Z satisfies Properties (d) and (e), the monomials s_i and t_i are distinct for all $i \in [k]$.

We define the point $y \in \mathbb{R}^{\mathcal{M}}$ via

$$y_m := \begin{cases} 0 & \text{if } m \in pred(u_k), \\ \frac{1}{2} & \text{if } m \in pred(s_i) \text{ for some } i \in [k] \text{ and } m \notin pred(u_k), \\ 1 & \text{otherwise,} \end{cases}$$

for all $m \in \mathcal{M}$. Figure 6 shows the constructed point for the running Example 3. We first show $y \in P(\mathcal{L})$. By construction, the bounds (3a) are satisfied.

Consider an inequality (3b) $y_{m'} \leq y_m$ for $m \in \mathcal{C} \in \mathcal{A}$ and let $m' := \bigcup \mathcal{C}$. Thus, (m', m) is an arc of $D(\mathcal{L})$. If $y_m = 0$, then $m \in pred(u_k)$ and also $m' \in pred(u_k)$, which implies $y_{m'} = 0$, and the inequality holds. If $y_m = \frac{1}{2}$, then $m \in pred(s_i)$ for some $i \in [k]$, which implies $m' \in pred(s_i)$. Thus, $y_{m'} = 0$ if $m \in pred(u_k)$ or $y_{m'} = \frac{1}{2}$ otherwise. Again the inequality holds, which is also trivially true for $y_m = 1$. This shows that (3b) is satisfied.

Consider an inequality (3c) $\sum_{m \in \mathcal{C}} y_m \leq y_{m'} + |\mathcal{C}| - 1$ for $\mathcal{C} \in \mathcal{A}$ with $m' := \bigcup \mathcal{C}$. If $y_{m'} = \frac{1}{2}$, then $m' \in pred(s_i)$ for some $i \in [k]$. Hence, also $m \in pred(s_i)$ for some monomial $m \in \mathcal{C}$ which shows $y_m = \frac{1}{2}$ or $y_m = 0$. Thus, the inequality is satisfied. If $y_{m'} = 0$, then $m' \in pred(u_k)$. If, for some $m \in \mathcal{C}$, $m \in pred(u_k)$ holds, we have $y_m = 0$ as well. Otherwise, $m' = u_k$ holds, and there exist monomials $m_1, m_2 \in \mathcal{C}$ with $m_1 \in pred(\ell_k) \subseteq pred(s_k)$ and $m_2 \in pred(\ell_1) \subseteq pred(s_1)$. Hence, $y_{m_1} = y_{m_2} = \frac{1}{2}$ in this case. Thus, in both cases, the inequality holds. The only remaining case is $y_{m'} = 1$, in which the inequality follows from $y_m \leq 1$ for all $m \in \mathcal{C}$. This proves that (3c) holds, and we conclude that $y \in P(\mathcal{L})$.

We now show $y_{t_i} = \frac{1}{2}$ for $i \in [k-1]$. From $t_i \in pred(u_i) \subseteq pred(\ell_i) \subseteq pred(s_i)$ it follows that $y_{t_i} \neq 1$. We also have $y_{t_i} \neq 0$, since otherwise $u_k \in succ(t_i) \cap succ(u_i)$ would contradict Property (e). Hence, $y_{t_i} = \frac{1}{2}$.

Let $Q' := \operatorname{proj}_{\mathcal{S} \cup \mathcal{T}}(P(\mathcal{L}))$, and let y' be the projection of y. Assume, for the sake of contradiction, that Q' is integral. Consider the set F of points $y \in Q'$ that satisfy

- $y_{\hat{s}} = 1$ for all $\hat{s} \in \mathcal{S} \setminus \{s_i : i \in [k]\}$,
- $y_{t_k} = 0$,
- $y_{s_i} = y_{t_i}$ and $y_{s_{i+1}} = y_{t_i}$ for $i \in [k-1]$.

Note that F is a face of Q', since for $i \in [k-1]$, there exist t_i-s_i-paths and t_i-s_{i+1}-paths in $D(\mathcal{L})$, showing $s_i, s_{i+1} \subseteq succ(t_i)$, which in turn shows that the inequalities $y_{t_i} \leq y_{s_i}$ and $y_{t_i} \leq y_{s_{i+1}}$ are valid for Q'. Thus, since Q' is integral, F is integral as well.

Let $y^\star \in F \cap \mathbb{Z}^{\mathcal{S} \cup \mathcal{T}}$ be an arbitrary integer point in F. By definition of F, there exists a value $\beta \in \{0, 1\}$ such that $y^\star_{s_i} = \beta$ for all $i \in [k]$ and $y^\star_{t_i} = \beta$ for all $i \in [k-1]$. Suppose, $\beta = 1$ holds, i.e., $y^\star_{\hat{s}} = 1$ for all $\hat{s} \in \mathcal{S}$ holds. Then (3c) and consistency of $\mathcal{L}$ imply $y^\star_m = 1$ for all $m \in \mathcal{M}$, in particular for $m = t_k$, which is a contradiction to $y^\star \in F$. Hence, $\beta = 0$ must hold. Again by (3a)–(3c) and consistency of $\mathcal{L}$ the remaining entries of $y^\star$ are uniquely determined. This shows that F contains at most one integer point, namely $y^\star$ with $\beta = 0$. Since also $y' \in F$ holds, and since $y' \notin \mathbb{Z}^{\mathcal{S} \cup \mathcal{T}}$, we have a contradiction to the integrality of F. This in turn shows that Q' is not integral. □

It now remains to combine the previous lemmas for our necessity proof.

Necessity proof for Theorem 9. Let $\mathcal{L} = (n, \mathcal{M}, \mathcal{A})$ be a simple linearization and $\mathcal{T} \subseteq \mathcal{M}^p$ be a subset of the proper monomials. Assume that $D(\mathcal{L})$ contains a subgraph Z satisfying Properties (a) and (b). We have to show that $\operatorname{proj}_{\mathcal{S} \cup \mathcal{T}}(P(\mathcal{L}))$ is not integral.

Using the assumptions, Lemma 15 implies that we can assume $|U(Z)| = 1$ or that Z satisfies Properties (c)–(e). The fact that $\operatorname{proj}_{\mathcal{S} \cup \mathcal{T}}(P(\mathcal{L}))$ is not integral is implied by Lemma 16 in the former case and by Lemma 17 in the latter case. This concludes the proof. □

4. Existence of Integral Simple Linearizations

In the previous section, we were able to characterize whether a given simple linearization induces an integral relaxation of the multilinear polytope. Extending this investigation, a natural question is whether one can characterize whether a given polynomial admits an integral simple linearization or whether every simple linearization leads to a fractional polytope. In this section, we provide the following complete answer to this question.

Theorem 18. *Let $\mathcal{T}$ be a set of monomials with singletons $\mathcal{S}$. Then there exists a simple linearization $\mathcal{L} = (n, \mathcal{M}, \mathcal{A})$ with $\mathcal{S} \cup \mathcal{T} \subseteq \mathcal{M}$ such that $\mathrm{proj}_{\mathcal{S}\cup\mathcal{T}}(P(\mathcal{L}))$ is integral if and only if none of the following properties holds:*

(A) There exist m_1, m_2, $m_3 \in \mathcal{T}$ with $m_1 \cap m_2 \cap m_3 \neq \varnothing$ such that $m_3 \cap (m_1 \cup m_2)$ is a proper superset of both $m_3 \cap m_1$ and $m_3 \cap m_2$.

(B) There exist pairwise different $m_1, \dots, m_k \in \mathcal{T}$, $k \geq 3$, such that for all $i, j \in [k]$, we have $m_i \cap m_j \neq \varnothing$ if and only if i and j differ by at most 1 modulo k.

Note that the monomials m_1, m_2, m_3 in (A) need to be pairwise different, since otherwise, $m_3 \cup (m_1 \cup m_2)$ cannot be a proper superset of $m_3 \cap m_i$ for both $i \in [2]$.

In the following, we say that a set of monomials $\mathcal{T}$ has the *monomial intersection property* if it neither satisfies (A) nor (B). It is intuitive that Property (B) induces a cycle in $G(D(\mathcal{L}))$ for any suitable linearization $\mathcal{L}$. However, seeing that Property (A) has the same consequence is not as easy, and we start with an example. We use the following notation: Given two distinct nodes u and v of a digraph, we denote by $P(u, v)$ a path connecting u and v (if it exists). Moreover, if $v = \{i\}$ for some $i \in [n]$, we let $P(u, i) := P(u, \{i\})$ whenever the meaning of i is clear from the context.

Example 19. Consider $\mathcal{T} = \{m_1, m_2, m_3\}$ with $m_1 = \{1, 2, 3, 4\}$, $m_2 = \{4, 5, 6\}$, and $m_3 = \{3, 4, 5\}$ with singletons $\mathcal{S} = \{1, 2, 3, 4, 5, 6\}$. The relevant intersections are given by $m_3 \cap m_1 = \{3, 4\}$, $m_3 \cap m_2 = \{4, 5\}$, $m_3 \cap (m_1 \cup m_2) = m_3$ and $m_1 \cap m_2 \cap m_3 = \{4\}$. Since $m_3 \cap (m_1 \cup m_2)$ is a proper superset of both $m_1 \cap m_3$ and $m_2 \cap m_3$, $\mathcal{T}$ has Property (A).

First observe that this property implies that neither $m_1 \cap m_3 \subseteq m_2 \cap m_3$ nor that the reverse inclusion holds. By Proposition 2, there exist paths $P(m_2, 4)$ and $P(m_3, 4)$ connecting m_2 and m_3 with $\{4\}$ as well as paths $P(m_2, 5)$ and $P(m_3, 5)$ connecting m_2 and m_3 with $\{5\}$ in $D(\mathcal{L})$.

Suppose $m_2 \cap m_3 = \{4, 5\}$ is not a successor of m_2. Then, at least one of $P(m_2, 4)$ or $P(m_2, 5)$ consists of the single arc $(m_2, \{4\})$ or $(m_2, \{5\})$, respectively. Hence, the concatenation of all four paths contains a cycle in $G(D(\mathcal{L}))$, because neither m_2 can be a successor of m_3 nor vice versa, see Figure 7a. Thus, such a linearization cannot be integral by Theorem 9. Similarly, we can argue if $m_2 \cap m_3$ is not a successor of m_3 or $m_1 \cap m_2$ is neither a successor of m_1 nor m_2.

For this reason, any integral linearization contains $m_1 \cap m_3$ and $m_2 \cap m_3$ as monomials and both have to be successors of m_1 and m_3 as well as m_2 and m_3, respectively. However, since $m_3 \cap m_1 \nsubseteq m_3 \cap m_2$ and $m_3 \cap m_1 \nsupseteq m_3 \cap m_2$, consistency of $\mathcal{L}$ implies that there exist two distinct paths connecting m_3 and $m_1 \cap m_2 \cap m_3$, one using $m_3 \cap m_1$ as intermediate node and the other using $m_3 \cap m_2$. Thus, $G(D(\mathcal{L}))$ contains a cycle, see Figure 7b, showing that no linearization of $\mathcal{T}$ can be integral.

The outline of the proof of Theorem 18 is as follows. First, we show for an integeral simple linearization and distinct monomials m_i and m_j that $m_i \cap m_j$ is a common successor of m_i and m_j if $m_i \cap m_j \neq \varnothing$ as illustrated in Example 19. This allows to prove that every linearization graph contains a cycle if $\mathcal{T}$ does not have the monomial intersection property. For (A) this proof was already sketched in Example 19; for (B) we show that there exists a cycle by concatenating paths connecting m_i and m_{i+1} with their intersection $m_i \cap m_{i+1}$. Afterwards, we construct a particular linearization that is acyclic if $\mathcal{T}$ has the monomial intersection property.

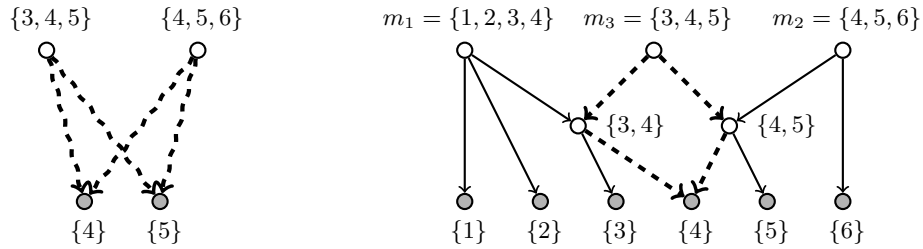

(a) Monomial $\{4, 5\}$ is not present.

(b) Monomials $\{3, 4\}$ and $\{4, 5\}$ are present.

FIGURE 7. Illustration of different situations in Example 19. Induced cycles of $G(D(\mathcal{L}))$ are shown dashed.

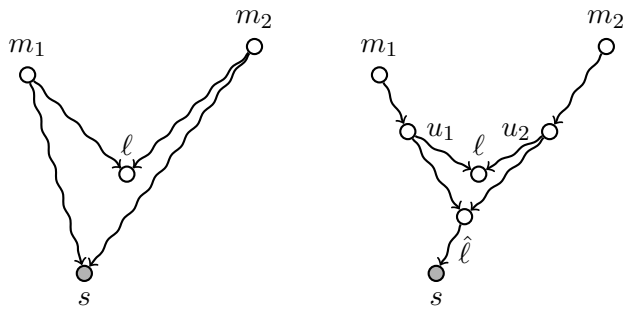

FIGURE 8. Construction from the proof of Lemma 20.

4.1. PROPERTIES OF $G(D(\mathcal{L}))$

Throughout this section, we assume that $\mathcal{T}$ is a set of monomials with singletons $\mathcal{S}$ and that $\mathcal{L} = (n, \mathcal{M}, \mathcal{A})$ is a simple linearization with $\mathcal{S} \cup \mathcal{T} \subseteq \mathcal{M}$. Moreover, we assume that every node of $D(\mathcal{L})$ with in-degree 0 belongs to $\mathcal{T}$. This assumption is without loss of generality since Corollary 8 guarantees that the removal of nodes $m \in \mathcal{M}^p \setminus \mathcal{T}$ with in-degree 0 does not affect integrality. Hence, only Property (a) of Theorem 9 is relevant for integrality, since Property (b) is satisfied automatically.

All successor and predecessor relations mentioned in the following results are w.r.t. the linearization graph $D(\mathcal{L})$.

We now prove a key lemma for understanding the construction of linearization whose digraph is acyclic. It shows that the intersection of two target monomials m_1 and m_2 has to be part of an acyclic linearization.

Lemma 20. *Let m_1, $m_2 \in \mathcal{M}$ with $m_1 \cap m_2 \neq \varnothing$ and $m_1 \cap m_2 \notin succ(m_1) \cap succ(m_2)$. Then $G(D(\mathcal{L}))$ contains a cycle.*

Proof. Let m_1, $m_2 \in \mathcal{T}$ satisfy the requirements of the lemma. We first observe that if $|m_1 \cap m_2| = 1$, Proposition 2 shows that there exists a path from m_1 and m_2 to the singleton in $m_1 \cap m_2$, contradicting the assumption that $m_1 \cap m_2 \notin succ(m_1) \cap succ(m_2)$. Thus, $|m_1 \cap m_2| \geq 2$.

Consider $\ell \in \mathcal{M}$ of largest cardinality with $\ell \in succ(m_1) \cap succ(m_2)$. Then $\ell \subset m_1 \cap m_2$, because ℓ cannot contain singletons that are neither contained in m_1 nor in m_2; moreover, $\ell \neq m_1 \cap m_2$ by assumption. Thus, there exists a singleton $s \in (m_1 \cap m_2) \setminus \ell$ (using $|m_1 \cap m_2| \geq 2$). Then there exist distinct paths $P(m_1, \ell)$, $P(m_2, \ell)$, $P(m_1, s)$, $P(m_2, s)$; see Figure 8 for an illustration.

Let u_1 and u_2 be the last common node of $P(m_1, \ell)$ and $P(m_1, s)$ as well as $P(m_2, \ell)$ and $P(m_2, s)$. Since $s \in u_1$, $s \in u_2$, neither u_1 nor u_2 is equal to ℓ. Moreover, $\ell \subset u_1$, $\ell \subset u_2$ and thus u_1 and u_2 are distinct—otherwise ℓ would not be maximal. Furthermore,

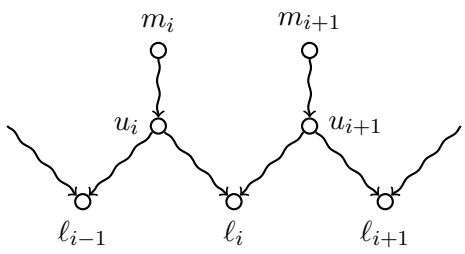

FIGURE 9. Construction from the proof of Lemma 22.

let $\hat{\ell}$ be the first common node of the paths $P(u_1, s)$ and $P(u_2, s)$. Then $\hat{\ell}$ is not equal to the other three nodes. In total there is a cycle with upper nodes u_1 and u_2 as well as lower nodes ℓ_1 and ℓ_2. □

Note that $m_1 \subset m_2$ is allowed in Lemma 20 ($m_1 \notin succ(m_2)$ in this case).

In summary, this shows that every integral linearization of $\mathcal{T}$ uses the monomials $m_1 \cap m_2$ if $m_1, m_2 \in \mathcal{M}$ and $m_1 \cap m_2 \neq \varnothing$ hold due to Lemma 20 and Theorem 9. This allows us to prove one direction of Theorem 18: the next lemma shows that every integral linearization cannot contain monomials that satisfy (A). Then Lemma 22 will show that they cannot satisfy (B).

Lemma 21. *Let $m_1, m_2, m_3 \in \mathcal{T}$ be pairwise different monomials satisfying Property (A), i.e., their intersection is nonempty and $m_3 \cap (m_1 \cup m_2)$ is a proper superset of $m_3 \cap m_1$ and $m_3 \cap m_2$. Then $G(D(\mathcal{L}))$ contains a cycle.*

Proof. Since $m_3 \cap (m_1 \cup m_2)$ is a proper superset of $m_3 \cap m_1$ and $m_3 \cap m_2$, neither m_1 is a subset of m_2 and m_3 nor m_2 is a subset of m_1 and m_3. Consequently,

$$m_3 \supset m_3 \cap m_1 \supset m_3 \cap m_1 \cap m_2 \qquad \text{and} \qquad m_3 \supset m_3 \cap m_2 \supset m_3 \cap m_1 \cap m_2.$$

If a linearization $\mathcal{L}$ does not make use of one of the intersections $m_3 \cap m_1$, $m_3 \cap m_2$, or $m_3 \cap m_1 \cap m_2$, Lemma 20 shows that $G(D(\mathcal{L}))$ contains a cycle. For this reason, assume all these intersections appear as monomials in $\mathcal{L}$. For $i \in [2]$, let P_i be a path connecting m_3 and $m_1 \cap m_2 \cap m_3$ that uses $m_3 \cap m_i$ as intermediate node. Then $m_3 \cap m_1$ is not a successor of $m_3 \cap m_2$, because otherwise, $m_3 \cap (m_1 \cup m_2) = m_3 \cap m_2$, contradicting the assumption. Analogously we find that $m_3 \cap m_2$ is not a successor of $m_3 \cap m_1$. Thus, P_1 and P_2 are different. Using the same arguments as in the proof of Lemma 20, we find that $P_1 \cup P_2$ contains a cycle whose upper node is the first common predecessor of $m_3 \cap m_1$ and $m_3 \cap m_2$ and whose lower node is the first common successor of these two intersections. □

Lemma 22. *Let $m_1, \dots, m_k \in \mathcal{T}$ with $k \geq 3$ be pairwise different monomials satisfying Property (B), i.e., for all $i, j \in [k]$, we have $m_i \cap m_j \neq \varnothing$ if and only if i and j differ by at most 1 modulo k. Then $G(D(\mathcal{L}))$ contains a cycle.*

Proof. Let $m, m' \in \mathcal{T}$. If $m \cap m' \neq \varnothing$, by Lemma 20, we can assume that $D(\mathcal{L})$ contains the node $m \cap m'$, which is a successor of m and m'. Therefore, for every $i \in [k]$, $\ell_i := m_i \cap m_{i+1}$ is a node of $D(\mathcal{L})$ and it is a successor of m_i and m_{i+1}, where $m_{k+1} := m_1$. (Note that ℓ_i might coincide with either m_i or m_{i+1} if $k = 3$.) Thus, for every $i \in [k]$, there exist directed paths $P(m_i, \ell_i)$ and $P(m_{i+1}, \ell_i)$ in $D(\mathcal{L})$, see Figure 9.

For $i \in [k]$, let u_i be the last common node of $P(m_i, \ell_i)$ and $P(m_i, \ell_{i-1})$, where we set $\ell_0 := m_k \cap m_1$. Consider the paths $P(u_i, \ell_i)$ and $P(u_{i+1}, \ell_i)$. These paths are arc-disjoint, because ℓ_i contains all elements that appear in both m_i and m_{i+1}, and thus, all elements that appear in u_i and u_{i+1}. The union of the paths $P(u_i, \ell_i)$, $P(u_i, \ell_{i-1})$ for every $i \in [k]$ yields a cycle in $G(D(\mathcal{L}))$. □

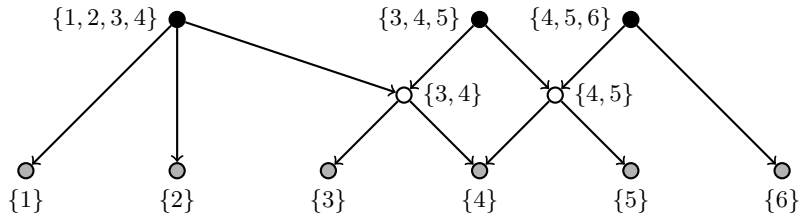

FIGURE 10. The linearization graph $D^\star$ for Example 3.

Combining the previous results, establishes the necessity of the requirements in Theorem 18 for the existence of integral linearizations.

Necessity proof for Theorem 18. Let $\mathcal{T}$ be a set of monomials with singletons $\mathcal{S}$ such that at least one of the properties (A) and (B) is satisfied. Assume, for the sake of contradiction that there exists a simple linearization $\mathcal{L} = (n, \mathcal{M}, \mathcal{A})$ with $\mathcal{T} \subseteq \mathcal{M}^p$ such that $\operatorname{proj}_{\mathcal{S}\cup\mathcal{T}}(P(\mathcal{L}))$ is integral. By Lemma 21 or Lemma 22, $G(D(\mathcal{L}))$ contains a subgraph Z of $D(\mathcal{L})$ such that $G(Z)$ is a cycle. By Corollary 8, we can assume that each monomial $m \in \mathcal{M}^p$ with in-degree 0 belongs to $\mathcal{T}$ since we could otherwise construct a linearization without this monomial retaining the same properties. Hence, Z satisfies Property (b) of Theorem 9, contradicting the integrality assumption. □

4.2. Constructing Acyclic Linearizations

For the sufficiency proof for Theorem 18 we explicitly construct a simple linearization that is acyclic, provided $\mathcal{T}$ has the monomial intersection property. For a given family of target monomials $\mathcal{T}$ and singletons $\mathcal{S}$, define the sets

$$\mathcal{I}(\mathcal{T}) := \Big\{ I \subseteq \mathcal{T} : \bigcap_{m\in I} m \neq \varnothing \Big\} \quad \text{and} \quad \mathcal{M}' = \mathcal{M}'(\mathcal{T}) := \Big\{ \bigcap_{m\in I} m : I \in \mathcal{I}(\mathcal{T}) \Big\}.$$

The set $\mathcal{I}(\mathcal{T})$ contains all subsets of monomials whose intersection is non-empty, whereas $\mathcal{M}'$ contains the corresponding non-empty intersections. Notice that $\mathcal{M}'$ may contain singletons.

Remark 23. Note that the set $\mathcal{I}(\mathcal{T})$ forms an independence system (or simplicial complex). It is sometimes called the *nerve* of the family $\mathcal{T}$, see, e.g., Björner [7]. The set $\mathcal{M}'$ ordered by inclusion forms a partially ordered set (poset), which is closed under intersection. In fact, if we add an artificial maximal element $\hat{1}$ and a minimal element $\varnothing$, then it is a lattice. A relevant operation in this context is the *closure* of a set of variables (singletons) $s \subseteq \mathcal{S}$: $\operatorname{cl}(s) := \bigcap\{m \in \mathcal{T} : s \subseteq m\}$ (if no m with $s \subseteq m$ exists, we return $\hat{1}$); see Caspard and Monjardet [12] for an overview of such structures. This can be exploited algorithmically to construct $\mathcal{M}'$, see [25].

Using the above sets, we define $\mathcal{M}^\star := \mathcal{M}' \cup \mathcal{S}$ and the digraph $D^\star = (\mathcal{M}^\star, A^\star)$, where for m_1, $m_2 \in \mathcal{M}^\star$, the set $A^\star$ contains an arc (m_1, m_2) if and only if $m_2 \subset m_1$ and there does not exist $m_3 \in \mathcal{M}^\star$ satisfying $m_2 \subset m_3 \subset m_1$. That is, the graph $D^\star = (\mathcal{M}^\star, A^\star)$ represents the Hasse diagram of $\mathcal{M}^\star$, endowed with the subset relation as partial order. We denote the undirected version of $D^\star$ by $G^\star$ and define, for every node $m \in \mathcal{M}^\star$, $\delta^+(m) := \{m' \in \mathcal{M}^\star : (m, m') \in A^\star\}$.

Since $\mathcal{S} \cup \mathcal{T} \subseteq \mathcal{M}^\star$ and $m = \bigcup_{m'\in\delta^+(m)} m'$ for every $m \in \mathcal{M}^\star \setminus \mathcal{S}$, there exists a linearization $\mathcal{L}^\star = (n, \mathcal{M}^\star, \mathcal{A}^\star)$ of $\mathcal{T}$ such that $D^\star$ is the digraph associated with $\mathcal{L}^\star$. Figure 10 shows the linearization graph of $\mathcal{L}^\star$ for the running example.

Lemma 24. *If $D^\star$ contains a subgraph Z for which $G(Z)$ is a cycle and $|U(Z)| = 1$, then (A) holds.*

Proof. Suppose there exists a subgraph Z of $D^\star$ such that $G(Z)$ is a cycle and $|U(Z)| = 1$. We can assume that among all such subgraphs the unique upper node of Z has maximum cardinality. Then there exist monomials $u, \ell \in \mathcal{M}^\star$ such that $U(Z) = \{u\}$ and $L(Z) = \{\ell\}$. Moreover, there are two distinct arc-disjoint paths P_1 and P_2 in $D^\star$ connecting u and ℓ. Note that both paths consist of at least two arcs: On the one hand, we cannot have $|P_1| = |P_2| = 1$, since this would imply $P_1 = P_2$. On the other hand, if one path, say P_1, consists of a single arc, no $m \in \mathcal{M}^\star$ exists with $\ell \subset m \subset u$, contradicting the existence of P_2 by definition of the arc set $A^\star$.

Let v_1 and v_2 be the first successor of u in P_1 and P_2, respectively. Choose a target monomial $t_3 \in pred(u) \cap \mathcal{T}$, which exists by definition of $D^\star$. Moreover, let $s_1 \in v_1 \setminus v_2$ and $s_2 \in v_2 \setminus v_1$, noting that both sets are non-empty since v_1 and v_2 are different children of u and neither is a successor of the other. Finally, choose $t_1 \in pred(v_1) \cap \mathcal{T}$ such that $s_2 \notin t_1$. This is possible, since if each monomial in $pred(v_1) \cap \mathcal{T}$ contained s_2, this would have implied $s_2 \in v_1$ as well, contradicting the choice of s_2. Similarly, choose $t_2 \in pred(v_2) \cap \mathcal{T}$ such that $s_1 \notin t_2$.

This implies that $\ell \in succ(t_1) \cap succ(t_2) \cap succ(t_3)$, from which we obtain $t_1 \cap t_2 \cap t_3 \neq \varnothing$. Furthermore, $s_1 \in t_3 \cap (t_1 \setminus t_2)$ and $s_2 \in t_3 \cap (t_2 \setminus t_1)$ establish (A) for t_1, t_2 and t_3, which concludes the proof. □

Lemma 25. *$D^\star$ does not contain a subgraph Z for which $G(Z)$ is a cycle and $|U(Z)| = 2$.*

Proof. Suppose there exists a subgraph Z of $D^\star$ such that $G(Z)$ is a cycle and $|U(Z)| = 2$. Let u_1 and u_2 be the upper nodes and ℓ_1 and ℓ_2 be the lower nodes of Z. Then, by the definition of $U(Z)$ and $L(Z)$, there exist pairwise internally node disjoint paths P_j^i connecting u_i and ℓ_j for $i, j \in [2]$ whose union yields Z. Since $u_1 \cap u_2 \supseteq \ell_1 \neq \varnothing$, $u_1 \cap u_2$ is a node of $D^\star$.

Observe that both P_1^1 and P_2^1 have to traverse $u_1 \cap u_2$: Assume that this is not the case. Then, for $i \in [2]$, let $\bar{u}_i$ be the smallest superset of $u_1 \cap u_2$ in P_i^1 and $\bar{\ell}_i$ be the largest subset of $u_1 \cap u_2$ in P_i^1; these nodes exist because u_i or ℓ_i are candidates, respectively. This implies $\bar{\ell}_i \subset u_1 \cap u_2 \subset \bar{u}_i$. Thus, $G^\star$ does not contain the edge $\{\bar{u}_i, \bar{\ell}_i\}$. Hence, both P_1^1 and P_2^1 have to use $u_1 \cap u_2$ as an intermediate node. This, however, is a contradiction to the internal node disjointness of P_1^1 and P_2^1, and the result follows. □

Lemma 26. *Let k be the smallest integer such that $D^\star$ contains a subgraph Z for which $G(Z)$ is a cycle and $|U(Z)| = k$. If $k \geq 3$, then (B) holds.*

Proof. Suppose that Z is chosen such that $G(Z)$ is a cycle and $k := |U(Z)| \geq 3$ is minimal. Let $U(Z) = \{u_1, \dots, u_k\}$ and $L(Z) = \{\ell_1, \dots, \ell_k\}$ be such that there exist pairwise internally node disjoint paths in $D^\star$ connecting u_i and ℓ_i as well as u_i and ℓ_{i+1}, where we set $\ell_{k+1} = \ell_1$.

For every $i \in [k]$, let $t_i \in \mathcal{T}$ be such that $u_i \in succ(t_i)$. Oberserve that $t_i \notin succ(t_j)$ for all distinct $i, j \in [k]$: Otherwise, one of the following two cases occurs. (i) There exist two distinct paths from t_j to $u_i \cap u_j$, one using u_i and the other u_j as intermediate node; note that $u_i \cap u_j$ is a node by definition of $D^\star$. The union of these paths contains a cycle with a single upper node, contradicting the minimality assumption on Z. (ii) Every path in $D^\star$ from t_j to $u_i \cap u_j$ that traverses u_i also traverses u_j; w.l.o.g. u_i is a proper successor of u_j. Thus, there exists a path $P(u_j, u_i)$ not completely contained in Z, since otherwise u_i cannot be an upper node. This shows that there exists a "shortcut", which produces a cycle with less upper nodes, a contradiction to the minimality of Z.

Next, observe that $t_i \cap t_j \neq \varnothing$ if i and j differ by at most 1 (modulo k), because $u_i \subseteq t_i$ and $u_j \subseteq t_j$ and $u_i \cap u_j \neq \varnothing$ in this case.

Thus, it remains to show that $t_i \cap t_j = \varnothing$ if i and j differ by at least 2 (modulo k). If this was false, there would exist $i, j \in [k]$ that differ by at least 2 (modulo k) such that $t_i \cap t_j \neq \varnothing$. Then, there exist two internally node disjoint paths P_i and P_j connecting t_i

and $t_i \cap t_j$ as well as t_j and $t_i \cap t_j$, respectively. Consider the subgraph G' of $G^\star$ that is obtained by

- starting a walk in t_i,
- following P_i to reach $t_i \cap t_j$,
- going along P_j in reverse order to approach t_j,
- following a path to reach u_j (which exists since $u_j \in succ(t_j)$),
- continuing along a path contained in Z to reach u_i, and
- going back to t_i via a (reversed) path between t_i and u_i (which exists since $u_i \in succ(t_i)$).

If G' is a cycle, then $|U(G')| < k$, because the upper nodes u_i and u_j in Z are replaced by the upper nodes t_i and t_j and the remaining nodes in $U(G')$ form a proper subset of $U(Z)$, since we traverse only one path connecting u_i and u_j in Z passing through at least one other node in $U(Z)$. If G' is not a cycle, there exists a short cut Z' in G' being a cycle and fulfilling $|U(Z')| < k$ by the same arguments. Thus, we obtain a contradiction to the minimality assumption on Z. As a consequence, $t_i \cap t_j \neq \varnothing$ if and only if i and j differ by at most 1, which finally shows the assertion. □

Combining Lemmas 24 to 26, we have proved:

Corollary 27. *If $G^\star$ contains a cycle, then (A) or (B) hold.*

We are now ready to provide the missing part of the proof of Theorem 18.

Sufficiency proof for Theorem 18. Assume that $\mathcal{T}$ has the monomial intersection property. Let $\mathcal{L}^\star$ be the linearization described above. Then Corollary 27 shows that $G^\star$ does not contain a cycle. Hence, the linearization graph $G(D(\mathcal{L}^\star))$ is acylic, showing that $\operatorname{proj}_{\mathcal{S}\cup\mathcal{T}}(P(\mathcal{L}^\star))$ is integral by Theorem 9. □

Remark 28. A frequently used property in polynomial optimization is the running intersection property, see, e.g., Lasserre [27] and Kojima and Muramatsu [26]. A set of monomials $\mathcal{T}$ has the running intersection property if there exists an ordering $t_1, \dots, t_k$ of the sets in $\mathcal{T}$ such that for each $j \in \{2, \dots, k\}$ there exists $i \in [j-1]$ such that $t_j \cap \bigcup_{r=1}^{j-1} t_r = t_j \cap t_i$. While the running intersection property excludes (B), cf. Beeri et al. [5, Theorem 3.4(1)], it is still possible that (A) occurs, see Example 3 with $t_1 = \{1, 2, 3, 4\}$, $t_2 = \{3, 4, 5\}$, and $t_3 = \{4, 5, 6\}$.

5. Algorithmic Consequences

Consider a set $\mathcal{T}$ that satisfies the monomial intersection property, i.e., neither (A) nor (B) hold. In this section we discuss three approaches to solve an instance of (1) in polynomial time. While the first approach is due to Del Pia und Khajavirad [18], the two further approaches follow from Section 3 and Section 4.

5.1. Relation to Flower Inequalities

Del Pia and Khajavirad [18] derived a complete linear description of the multilinear polytope provided the intersections of target monomials have a certain structure. Using our notation, their result reads as follows.

Theorem 29 (Del Pia and Khajavirad [18])**.** *Let $\mathcal{T}$ be a set of monomials in variables $x_1, \dots, x_n$. Then, $\mathrm{BMP}_n(\mathcal{T})$ is completely described by box constraints, the inequalities of the standard linearization, as well as a (potentially) exponentially large class of so-called flower inequalities, which can be separated in time $\mathcal{O}(n^2|\mathcal{T}|^2 + n|\mathcal{T}|^3)$, if and only if neither of the following two conditions hold:*

(A′) there exist pairwise distinct $i_1, i_2, i_3 \in [n]$ such that

$$\big\{\{i_1, i_3\}, \{i_2, i_3\}, \{i_1, i_2, i_3\}\big\} \subseteq \{m \cap \{i_1, i_2, i_3\} \,:\, m \in \mathcal{T}\},$$

(B′) there exist pairwise different $i_1, \dots, i_k \in [n]$ and pairwise different $m_1, \dots, m_k \in \mathcal{T}$ with $k \geq 3$ such that
- *$i_j \in m_j, m_{j+1}$ for every $j \in [k-1]$,*
- *$i_k \in m_1 \cap m_k$, and*
- *i_j, $j \in [k]$, is not contained in any further target monomial.*

In the following, we show that $\mathcal{T}$ satisfies Conditions (A′) and (B′) if and only if it satisfies Properties (A) and (B). Thus, the results presented in this article complement the results by Del Pia and Khajavirad [18], because its now possible to avoid the exponentially many inequalities in the description of $\mathrm{BMP}_n(\mathcal{T})$ by using a polynomial size extended formulation that is given by $P(\mathcal{L}^\star)$. In fact, we will see in the next section that the extended formulation has linear size provided Properties (A) and (B) (resp.(A′) and (B′)) hold.

Lemma 30. *Let $\mathcal{T}$ be a set of monomials in variables $x_1, \dots, x_n$ that satisfies Property (A) or (B). Then, Condition (A′) or (B′) holds as well.*

Proof. Suppose $\mathcal{T}$ satisfies Property (A), where $m_1, m_2, m_3 \in \mathcal{T}$ are the corresponding monomials. Let $i_3 \in m_1 \cap m_2 \cap m_3$ and $i_1 \in m_1 \setminus m_2$ as well as $i_2 \in m_2 \setminus m_1$. The elements i_1, i_2, i_3 are distinct and exist, because $m_1 \cap m_2 \cap m_3$ is non-empty and $m_3 \cap (m_1 \cup m_2)$ is a proper superset of both $m_3 \cap m_1$ and $m_3 \cap m_2$. Consequently, $\big\{\{i_1, i_3\}, \{i_2, i_3\}, \{i_1, i_2, i_3\}\big\} \subseteq \big\{m \cap \{i_1, i_2, i_3\} \ : \ m \in \{m_1, m_2, m_3\}\big\}$, showing Condition (A′).

If $\mathcal{T}$ satisfies Property (B) for monomials $m_1, \dots m_k$, $k \geq 3$, then $m_i \cap m_j \neq \varnothing$ if and only if i and j differ by at most 1 modulo k. Hence, no element in $m_i \cap m_j$ can be contained in a further target monomial, which implies Condition (B′). □

Lemma 31. *Let $\mathcal{T}$ be a set of monomials in variables $x_1, \dots, x_n$ that satisfies Condition (A′) or (B′). Then, Property (A) or (B) hold as well.*

Proof. Suppose $\mathcal{T}$ satisfies Condition (A′) for i_1, i_2, $i_3 \in [n]$. Then, there exist m_1, m_2, $m_3 \in \mathcal{T}$ such that their restrictions to $\{m_1, m_2, m_3\}$ are $\{i_1, i_3\}$, $\{i_2, i_3\}$, and $\{i_1, i_2, i_3\}$. Since i_3 is contained in all these monomials, $m_1 \cap m_2 \cap m_3 \neq \varnothing$. Moreover, $m_3 \cap (m_1 \cup m_2)$ contains i_2, which is not contained in m_1. Hence, $m_3 \cap (m_1 \cup m_2)$ is a proper superset of $m_3 \cap m_1$. Analogously one shows $m_3 \cap (m_1 \cup m_2) \supset m_3 \cap m_2$, which implies Property (A).

If $\mathcal{T}$ satisfies Condition (B′), choose the corresponding elements $i_1, \dots, i_k$ and monomials $m_1, \dots, m_k$ such that k is minimal. If $m_i \cap m_j \neq \varnothing$ if and only if $|i - j| \leq 1$ for every i, $j \in [k]$, Property (B) follows immediately. For this reason, assume there exist distinct $m_1, m_2, m_3 \in \mathcal{T}$ such that $m_1 \cap m_2 \cap m_3 \neq \varnothing$. If $k > 3$, observe that there exists a proper subset of $\{i_1, \dots i_k\}$ and $\{m_1, \dots, m_k\}$ that fulfills Condition (B′), contradicting the minimality assumption on k. Hence, if $k > 3$, Property (B) holds.

If $k = 3$, the elements i_1 and i_3 from (B′) fulfill $i_3 \in (m_3 \cap m_1) \setminus m_2$ and $i_2 \in (m_3 \cap m_2) \setminus m_1$. Hence, $m_3 \cap (m_1 \cup m_2)$ is a proper superset of both $m_3 \cap m_1$ and $m_3 \cap m_2$. Because $m_1 \cap m_2 \cap m_3 \neq \varnothing$ by assumption, (A) follows. □

By combining these two lemmata, we obtain that the inequalities presented by Del Pia and Khajavirad are a complete linear description of $\mathrm{BMP}_n(\mathcal{T})$ in its original space if and only if $P(\mathcal{L}^\star)$ is an integral polytope.

5.2. Construction of the Extended Formulation

As mentioned above, our results give rise to an extended formulation for $\mathrm{BMP}_n(\mathcal{T})$ in case $P(\mathcal{L}^\star)$ is an integral polytope. We now discuss the verification of this condition and the computation of $\mathcal{L}^\star$ algorithmically.

Theorem 32. *Let $\mathcal{T}$ be a set of monomials in variables $x_1, \dots, x_n$. Using the RAM model,*

(a) it can be verified in time polynomial in $|\mathcal{T}|$ and n whether $\mathcal{T}$ satisfies the monomial intersection property.
(b) if $\mathcal{T}$ has the monomial intersection property, Problem (1) with coefficients $a \in \mathbb{Q}^{\mathcal{T}}$ can be solved in polynomial time.

Proof. To rule out that (A) holds requires to iterate over all triples in $\mathcal{T}$ and computing as well as comparing their (pairwise) intersections, which can be done in polynomial time. Property (B) can be verified by constructing a graph that contains for each monomial in $\mathcal{T}$ a node as well as an edge $\{t_1, t_2\}$ for each pair of distinct $t_1, t_2 \in \mathcal{T}$ with $t_1 \cap t_2 \neq \varnothing$. Then, deciding whether (B) holds, reduces to deciding whether the constructed graph contains a cycle, which can be done in polynomial time by BFS. Thus, the statement in (a) holds.

For part (b), recall that the linearization $\mathcal{L}^\star$ is acyclic if the monomial intersection property holds. Hence, Problem (1) can be solved by solving the linear program (3) corresponding to $\mathcal{L}^\star$ by Theorem 9. This linear program has $|\mathcal{M}^\star|$ variables and $\mathcal{O}(n|\mathcal{M}^\star|)$ constraints. Hence, (b) follows if we can show that $|\mathcal{M}^\star|$ is polynomial in n and $|\mathcal{T}|$ and $\mathcal{L}^\star$ can be computed in time polynomial in n and $|\mathcal{T}|$. To this end, we consider a single monomial $m \in \mathcal{M}^\star$ first.

Claim 33. *The number of successors of m in $D^\star$ is at most $2\,|m| - 1$.*

Proof. Since $\mathcal{L}^\star$ is acyclic, the subgraph of $D^\star$ containing m and all of its successors is a directed tree. Because this structure holds recursively for all successors of m, we can use induction to prove the claim. Obviously, the claim is true for the base case $|m| = 1$.

For the inductive step, we assume that for a monomial m' with $|m'| \leq k$ the number of successors satisfies $|succ(m')| \leq 2\,|m'| - 1$. If we are given a momomial m with $|m| = k+1$, the child nodes of m form a partition of the set m, because otherwise, $G(succ(m))$ contains a cycle. Then, the number of successors of m can be bounded by

$$|succ(m)| = 1 + \sum_{m' \in \delta^+(m)} |succ(m')| \leq 1 + \sum_{m' \in \delta^+(m)} (2\,|m'| - 1) = 1 + 2(k+1) - |\delta^+(m)|.$$

Since every non-trivial monomial has at least two successors, this expression is at most $2k + 1$, proving the claim. ◊

As a consequence, an upper bound for the number of nodes in $D^\star$ is given by adding these upper bounds for all $m \in \mathcal{T}$ (since $succ(\mathcal{T}) = \mathcal{M}^\star$) to get $\sum_{m \in \mathcal{T}} (2\,|m| - 1) \in \mathcal{O}(n \cdot |\mathcal{T}|)$.

To see that $\mathcal{L}^\star$ can be computed in time polynomial in n and $|\mathcal{T}|$, recall that $D(\mathcal{L}^\star)$ corresponds to the Hasse diagram of $\mathcal{M}^\star$, endowed with the subset relation as partial order. For this reason, the algorithm presented in [25] can be used to compute $\mathcal{L}^\star$, see Remark 28. Because the running time of this algorithm is polynomial in the output size, the linear program (3) can be generated in time polynomial in $n \cdot |\mathcal{T}|$ and has size $\mathcal{O}(n \cdot |\mathcal{T}|)$. Thus, the optimization problem (1) can be solved in polynomial time. □

5.3. Combinatorial Algorithm

In the previous section we saw that if $\mathcal{T}$ satisfies the monomial intersection property, then the acyclic linearization $\mathcal{L}^\star$ can be computed in polynomial time. We now present a combinatorial algorithm that, given such an acyclic linearization $\mathcal{L} = (n, \mathcal{M}, \mathcal{A})$, solves the optimization problem (1) by means of dynamic programming. We consider coefficients $a \in \mathbb{Q}^{\mathcal{M}}$, i.e., in addition to (1) we allow costs on the singletons as well.

Theorem 34. *Given a linearization $\mathcal{L} = (n, \mathcal{M}, \mathcal{A})$ for which $G(D(\mathcal{L}))$ is acyclic and an objective vector $a \in \mathbb{Q}^{\mathcal{M}}$, the optimization problem (1) can be solved in time $\mathcal{O}(|\mathcal{M}|^2)$ (in the RAM model).*

Proof. Let $D = D(\mathcal{L})$ be the digraph of $\mathcal{L}$ with node set $\mathcal{M}$ and arc set A and let $G = G(D)$ be the underlying undirected graph with edge set E. Clearly, if G is not connected, then

the optimization problem decomposes into subproblems that can be solved independently. Hence, we can assume that G is connected, i.e., it is a tree. We can assume that $\mathcal{M}^p \neq \varnothing$ since otherwise the problem is trivial.

Let the *root monomial* $r \in \mathcal{M}^p$ be a monomial that is not contained in any AND-constraint, i.e., r has in-degree 0 in $D(\mathcal{L})$. The map $\alpha\colon \mathcal{M} \setminus \{r\} \to \mathcal{M}$ shall denote the direction towards r by setting $\alpha(m)$ (for each $m \in \mathcal{M} \setminus \{r\}$) to be the second node on the unique m-r-path. Our dynamic program will propagate information within G towards r. We partition the set of non-root monomials into two sets $\mathcal{M}^{\text{up}}$ and $\mathcal{M}^{\text{down}}$ as follows. Let $\mathcal{M}^{\text{up}} := \{m \in \mathcal{M}\setminus\{r\} \,:\, (\alpha(m), m) \in A\}$ and $\mathcal{M}^{\text{down}} := \{m \in \mathcal{M}\setminus\{r\} \,:\, (m, \alpha(m)) \in A\}$.

We now define the information that is propagated through the dynamic program. For a node $m \in \mathcal{M} \setminus \{r\}$, define $\mathcal{M}(m)$ to be the node set of the connected component of $G \setminus \{\{m, \alpha(m)\}\}$ that contains m. Define $\mathcal{M}(r) := \mathcal{M}$. For monomial subsets $\mathcal{M}' \subseteq \mathcal{M}$ define $Y(\mathcal{M}') \subseteq \{0,1\}^{\mathcal{M}'}$ as the set of vectors that satisfy all constraints of $\mathcal{L}$ that only involve monomials in $\mathcal{M}'$. Moreover, we write $a(y) := \sum_{m\in\mathcal{M}'} a_m y_m$ for vectors $y \in \mathbb{R}^{\mathcal{M}'}$. Let $\text{zero}^{\text{up}}, \text{one}^{\text{up}}\colon \mathcal{M}^{\text{up}} \cup \{r\} \to \{0,1\}^\star$ be defined such that

$$\text{zero}^{\text{up}}(m) \in \arg\min\big\{a(y) \,:\, y \in Y(\mathcal{M}(m)),\ y_m = 0\big\} \text{ and}$$
$$\text{one}^{\text{up}}(m) \in \arg\min\big\{a(y) \,:\, y \in Y(\mathcal{M}(m)),\ y_m = 1\big\}$$

hold. Let $\text{zero}^{\text{down}}, \text{one}^{\text{down}}\colon \mathcal{M}^{\text{down}} \to \{0,1\}^\star$ be defined such that

$$\text{zero}^{\text{down}}(m) \in \arg\min\big\{a(y) \,:\, y \in \{0,1\}^{\mathcal{M}(m)} \text{ and } (y,0) \in Y(\mathcal{M}(m) \cup \{\alpha(m)\})\big\} \text{ and}$$
$$\text{one}^{\text{down}}(m) \in \arg\min\big\{a(y) \,:\, y \in \{0,1\}^{\mathcal{M}(m)} \text{ and } (y,1) \in Y(\mathcal{M}(m) \cup \{\alpha(m)\})\big\}$$

hold, where the last coordinate in $(y,0)$ and $(y,1)$ shall correspond to monomial m. Note that in particular the coefficient $a_{\alpha(m)}$ does not play a role in the definitions of $\text{zero}^{\text{down}}$ and one^{down}.

Clearly, the computation of $\text{zero}^{\text{up}}(r)$ and $\text{one}^{\text{up}}(r)$ solves the problem since the optimum value is $\min\{a(\text{zero}^{\text{up}}(r)), a(\text{one}^{\text{up}}(r))\}$.

We now describe how zero^{up}, one^{up}, $\text{zero}^{\text{down}}$ and one^{down} can be computed recursively. To this end, observe that $\text{zero}^{\text{up}}(m) = 0$ and $\text{one}^{\text{up}}(m) = 1$ holds for all $m \in \mathcal{M}$ with $\mathcal{M}(m) = \{m\}$. The other nodes are considered in order of decreasing distance to r (in G), which ensures that zero^{up} and one^{up} or $\text{zero}^{\text{down}}$ and one^{down} are known for each of the neighbors with a larger distance to r. Let $m \in \mathcal{M}$ be such a monomial, which may be the resultant of an AND-constraint $\mathcal{C} = \{m_1, \dots, m_k\}$. If this is not the case, e.g., if m is a singleton that is contained in two AND-constraints, then we let $\mathcal{C} = \varnothing$ and $k = 0$. Moreover, let $\bar{\mathcal{C}}_1, \bar{\mathcal{C}}_2, \dots, \bar{\mathcal{C}}_\ell \in \mathcal{A}$ be those constraints in which m is contained and whose resultant is not $\alpha(m)$. Let $\bar{m}_i := \bigcup \bar{\mathcal{C}}_i$ for $i \in [\ell]$ be their respective resultant monomials. Clearly, $\bar{m}_i \in \mathcal{M}^{\text{down}}$ holds for all $i \in [\ell]$. We distinguish two cases, depending on the propagation direction of m.

Case 1: $m \in \mathcal{M}^{\text{up}} \cup \{r\}$.
The vector $\text{one}^{\text{up}}(m)$ is constructed as follows. First, set $\text{one}^{\text{up}}(m)_m := 1$. Second, set $\text{one}^{\text{up}}(m)_{\mathcal{M}(\bar{m}_i)} := \text{one}^{\text{down}}(\bar{m}_i)$ for $i \in [\ell]$. Third, set $\text{one}^{\text{up}}(m)_{\mathcal{M}(m_i)} := \text{one}^{\text{up}}(m_i)$ for $i \in [k]$. By induction, we only have to verify feasibility with respect to the constraints that involve m (and do not involve $\alpha(m)$). Clearly, if $\mathcal{C} \neq \varnothing$, then this constraint is satisfied since all participating coordinates of $\text{one}^{\text{up}}(m)$ are equal to 1. By definition of one^{down}, for $i \in [\ell]$, constraint $\bar{\mathcal{C}}_i$ is satisfied by $\text{one}^{\text{down}}(\bar{m}_i)$ extended with a 1-entry at index m, and thus also by $\text{one}^{\text{up}}(m)$. By induction, $a(\text{one}^{\text{up}}(m))$ is minimum.

The vector $\text{zero}^{\text{up}}(m)$ is constructed as follows. First, set $\text{zero}^{\text{up}}(m)_m := 0$. Second, set $\text{zero}^{\text{up}}(m)_{\mathcal{M}(\bar{m}_i)} := \text{zero}^{\text{down}}(\bar{m}_i)$ for $i \in [\ell]$. As above, this ensures that, for $i \in [\ell]$, constraint $\bar{\mathcal{C}}_i$ is satisfied since $\text{zero}^{\text{down}}(\bar{m}_i)$ extended with a 0-entry at index m satisfies this constraint. Third, for $i \in [k]$, an optimal choice for $\text{zero}^{\text{up}}(m)_{\mathcal{M}(m_i)}$ is determined

by choosing the better (with respect to a) among $\text{zero}^{\text{up}}(m_i)$ and $\text{one}^{\text{up}}(m_i)$. However, if $\mathcal{C} \neq \varnothing$, we have to be careful if $a(\text{one}^{\text{up}}(m_i)) \leq a(\text{zero}^{\text{up}}(m_i))$ holds for all $i \in [k]$, since a solution with $y_{m_i} = 1$ for all i and $y_m = 0$ clearly violates constraint $\mathcal{C}$. In this case it is feasible and optimal to select $\text{zero}^{\text{up}}(m)_{\mathcal{M}(m_i)} := \text{zero}^{\text{up}}(m_i)$ for some index $i \in [k]$ for which $a(\text{zero}^{\text{up}}(m_i)) - a(\text{one}^{\text{up}}(m_i))$ is minimum (and $a(\text{one}^{\text{up}}(m_i))_{\mathcal{M}(m_j)} := \text{one}^{\text{up}}(m_j)$ for all other indices).

Case 2: $m \in \mathcal{M}^{\text{down}}$.
Let $I := \{i \in [k] : m_i \neq \alpha(m)\}$ index those monomials in $\mathcal{C}$ of which we have computed zero^{up} and one^{up}. To construct the vector $\text{one}^{\text{down}}(m)$, we have to decide whether $\text{one}^{\text{down}}(m)_m$ should be equal to 0 or equal to 1. To this end, we construct a candidate vector for each case.

We set $y^0_m := 0$ and $y^0_{\mathcal{M}(\bar{m}_i)} := \text{zero}^{\text{down}}(\bar{m}_i)$ for $i \in [\ell]$. For $i \in I$, an optimal choice for $y^0_{\mathcal{M}(m_i)}$ is determined by choosing the better (with respect to a) among $\text{zero}^{\text{up}}(m_i)$ and $\text{one}^{\text{up}}(m_i)$. However, we have to be careful if $a(\text{one}^{\text{up}}(m_i)) \leq a(\text{zero}^{\text{up}}(m_i))$ holds for all $i \in I$ since a solution with $y^0_{m_i} = 1$ for all $i \in I$ and $y^0_m = 0$, extended with a 1-entry at index $\alpha(m)$, clearly violates constraint $\mathcal{C}$. In this case it is optimal (and feasible) to select $y^0_{\mathcal{M}(m_i)} := \text{zero}^{\text{up}}(m_i)$ for some index $i \in I$ for which $a(\text{zero}^{\text{up}}(m_i)) - a(\text{one}^{\text{up}}(m_i))$ is minimum (and $a(\text{one}^{\text{up}}(m_i))_{\mathcal{M}(m_j)} := \text{one}^{\text{up}}(m_j)$ for all other indices).

We set $y^1_m := 1$, $y^1_{\mathcal{M}(\bar{m}_i)} := \text{one}^{\text{down}}(\bar{m}_i)$ for $i \in [\ell]$, and $y^1_{\mathcal{M}(m_i)} := \text{one}^{\text{up}}(m_i)$ for $i \in I$. By induction, we only have to verify feasibility with respect to the constraints that involve m. Clearly, $\mathcal{C}$ is satisfied by y^1 extended with a 1-entry at index $\alpha(m)$ since all participating coordinates are equal to 1. By definition of one^{down}, for $i \in [\ell]$, constraint $\mathcal{C}_i$ is satisfied by $\text{one}^{\text{down}}(\bar{m}_i)$ extended with a 1-entry at index m, and thus also by y^1. By induction, $a(\text{one}^{\text{up}}(m))$ is minimum (among those vectors with $y_m = 1$).

We can now select $\text{one}^{\text{down}}(m) \in \text{argmin}\{a(y^0), a(y^1)\}$.

The vector $\text{zero}^{\text{down}}(m)$ is constructed as follows. First, set $\text{zero}^{\text{down}}(m)_m := 0$. Second, set $\text{zero}^{\text{down}}(m)_{\mathcal{M}(\bar{m}_i)} := \text{zero}^{\text{down}}(\bar{m}_i)$ for $i \in [\ell]$. This again ensures that, for $i \in [\ell]$, constraint $\mathcal{C}_i$ is satisfied since $\text{zero}^{\text{down}}(\bar{m}_i)_2$ extended with a 0-entry at index m satisfies this constraint. Third, for all $i \in I$, the optimal choice for $\text{zero}^{\text{down}}(m)_{\mathcal{M}(m_i)}$ is determined by choosing the better (with respect to a) among $\text{zero}^{\text{up}}(m_i)$ and $\text{one}^{\text{up}}(m_i)$. Constraint $\mathcal{C}$ is satisfied by the vector $\text{zero}^{\text{down}}(m)$ extended with a 0-entry at index $\alpha(m)$ since $\text{zero}^{\text{down}}(m)_m = 0$.

This concludes the case distinction, showing how a vector $y \in Y(\mathcal{M})$ with mininum $a(y)$ can be constructed. To bound the running time, observe that we can account for all computations involving some vector $y \in \{\text{zero}^{\text{up}}(m), \text{one}^{\text{up}}(m), \text{zero}^{\text{down}}(m), \text{one}^{\text{down}}(m)\}$ at the step in which it is constructed. This yields a running time of $\mathcal{O}(|\mathcal{M}|)$ per propagation step. Since less than $|\mathcal{M}|$-many such steps are required, the quadratic running time follows. □

Using our knowledge on the construction of $\mathcal{L}^\star$ for a given set $\mathcal{T}$ that satisfies the monomial intersection property, we obtain the following strengthening of Theorem 32 (b).

Corollary 35. *Let $\mathcal{T}$ be a set of monomials in variables $x_1, \ldots, x_n$ that satisfy the monomial intersection property. Then, Problem (1) with coefficients $a \in \mathbb{Q}^{\mathcal{T}}$ can be solved in time $\mathcal{O}(\min(n^3 \cdot |\mathcal{T}|^2, n^2 \cdot |\mathcal{T}|^3))$ (in the RAM model).*

Proof. The problem can be solved by computing $\mathcal{L}^\star$ and running the algorithm from Theorem 34. As in the proof of Theorem 32, the number of monomials of $\mathcal{L}^\star$ is at most $n \cdot |\mathcal{T}|$. This leads to a running time of $\mathcal{O}(n^2 \cdot |\mathcal{T}|^2)$ for the algorithm from Theorem 34. However, this is dominated by the running time $\mathcal{O}(\min(n^3 \cdot |\mathcal{T}|^2, n^2 \cdot |\mathcal{T}|^3))$ that is required to compute $\mathcal{L}^\star$ [25]. □

6. Outlook

The focus of this paper is on simple linearizations. The only direct implication of our results on non-simple linearizations $\mathcal{L} = (n, \mathcal{M}, \mathcal{A})$, i.e., those for which proper monomials may be the resultant of several AND-constraints, is the following sufficient criterion for deciding whether $P(\mathcal{L})$ is integral: we can think of the set $\mathcal{A}$ as the union of sets $\mathcal{A}_i$ for $i \in \mathcal{I}$, corresponding to several simple linearizations $\mathcal{L}_i$. These simple linearizations can be found by selecting one AND-constraint for every proper monomial being the resultant of at least two AND-constraints. We thus have

$$\operatorname{proj}_{\mathcal{S}\cup\mathcal{T}}(P(\mathcal{L})) = \operatorname{proj}_{\mathcal{S}\cup\mathcal{T}}\left(\bigcap_{i\in\mathcal{I}} P(\mathcal{L}_i)\right) \subseteq \bigcap_{i\in\mathcal{I}} \operatorname{proj}_{\mathcal{S}\cup\mathcal{T}}(P(\mathcal{L}_i)).$$

Consequently, if one of the simple linearizations $\mathcal{L}_i$ is integral, also $\operatorname{proj}_{\mathcal{S}\cup\mathcal{T}}(P(\mathcal{L}))$ is integral. If the set of target monomials, however, does not have the monomial intersection property, no integral simple linearization exists. An interesting question is whether there exists an integral non-simple linearization for a set $\mathcal{T}$ not having the monomial intersection property.

More generally, it is interesting to investigate the strength of (simple or non-simple) linearizations in case no integral linearization exists. Clearly, applying the linearization $\mathcal{L}^\star$ from Section 4.2 intuitively seems to be a good idea, but there is no clear dominance relationship if $\mathcal{T}$ does not satisfy the monomial intersection property. To see this, consider the instance with $n = 3$ and $\mathcal{T} = \{\{1,2\},\{2,3\},\{1,2,3\}\}$, depicted in Figure 11.

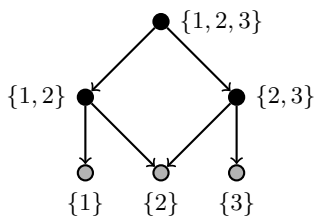

Figure 11. Example for which $P(\mathcal{L}^\star)$ does not dominate all relaxations that arise from simple linearizations.

The relaxation $P(\mathcal{L}^\star)$ does not imply inequality (3c) for $\mathcal{C} = \{\{1,2\},\{3\}\}$, which reads $y_{\{1,2\}} + y_{\{3\}} \leq y_{\{1,2,3\}} + 1$. Hence, it is interesting to study how to select a good simple linearization depending on the given polynomial.

Acknowledgments. We thank Monique Laurent for fruitful discussions.

References

[1] F. A. Al-Khayyal and J. E. Falk, *Jointly constrained biconvex programming*, Mathematics of Operations Research, 8 (1983), pp. 273–286.
[2] E. Balas and J. B. Mazzola, *Nonlinear 0–1 programming: I. Linearization techniques*, Mathematical Programming, 30 (1984), pp. 1–21.
[3] ———, *Nonlinear 0–1 programming: II. Dominance relations and algorithms*, Mathematical Programming, 30 (1984), pp. 22–45.
[4] F. Barahona, M. Jünger, and G. Reinelt, *Experiments in quadratic 0–1 programming*, Mathematical Programming, 44 (1989), pp. 127–137.
[5] C. Beeri, R. Fagin, D. Maier, and M. Yannakakis, *On the desirability of acyclic database schemes*, Journal of the ACM, 30 (1983), pp. 479–513.
[6] T. Berthold, S. Heinz, and M. E. Pfetsch, *Nonlinear pseudo-Boolean optimization: relaxation or propagation?*, in Theory and Applications of Satisfiability Testing – SAT 2009, O. Kullmann, ed., vol. 5584 of Lecture Notes in Computer Science, Springer, July 2009, pp. 441–446.
[7] A. Björner, *Homotopy type of posets and lattice complementation*, Journal of Combinatorial Theory, Series A, 30 (1981), pp. 90–100.

[8] E. Boros, Y. Crama, and P. L. Hammer, *Chvátal cuts and odd cycle inequalities in quadratic 0–1 optimization*, SIAM Journal on Discrete Mathematics, 5 (1992), pp. 163–177.

[9] E. Boros and P. L. Hammer, *Cut-polytopes, Boolean quadric polytopes and nonnegative quadratic pseudo-Boolean functions*, Mathematics of Operations Research, 18 (1993), pp. 245–253.

[10] ———, *Pseudo-Boolean optimization*, Discrete Applied Mathematics, 123 (2002), pp. 155–225.

[11] C. Buchheim and G. Rinaldi, *Efficient reduction of polynomial zero-one optimization to the quadratic case*, SIAM Journal on Optimization, 18 (2008), pp. 1398–1413.

[12] N. Caspard and B. Monjardet, *The lattices of closure systems, closure operators, and implicational systems on a finite set: a survey*, Discrete Applied Mathematics, 127 (2003), pp. 241–269.

[13] M. Conforti and K. Pashkovich, *The projected faces property and polyhedral relations*, Mathematical Programming, 156 (2016), pp. 331–342.

[14] Y. Crama, *Concave extensions for nonlinear 0–1 maximization problems*, Mathematical Programming, 61 (1993), pp. 53–60.

[15] Y. Crama and E. Rodríguez-Heck, *A class of valid inequalities for multilinear 0–1 optimization problems*, Discrete Optimization, 25 (2017), pp. 28–47.

[16] C. De Simone, *The cut polytope and the Boolean quadric polytope*, Discrete Mathematics, 79 (1990), pp. 71–75.

[17] A. Del Pia and A. Khajavirad, *A polyhedral study of binary polynomial programs*, Mathematics of Operations Research, 42 (2017), pp. 389–410.

[18] ———, *The multilinear polytope for acyclic hypergraphs*, SIAM Journal on Optimization, 28 (2018), pp. 1049–1076.

[19] ———, *On decomposability of multilinear sets*, Mathematical Programming, 170 (2018), pp. 387–415.

[20] L. L. Dines, *Systems of linear inequalities*, Annals of Mathematics, (1919), pp. 191–199.

[21] D. Ermel and M. Walter, *Parity polytopes and binarization*, Discrete Applied Mathematics, (2018).

[22] J. B. J. Fourier, *Analyse des travaux de l'académie royale des sciences pendant l'année 1824*, Partie mathématique, (1827).

[23] F. Glover and E. Woolsey, *Further reduction of zero-one polynomial programming problems to zero-one linear programming problems*, Operations Research, 21 (1973), pp. 156–161.

[24] ———, *Technical note—converting the 0–1 polynomial programming problem to a 0-1 linear program*, Operations Research, 22 (1974), pp. 180–182.

[25] V. Kaibel and M. E. Pfetsch, *Computing the face lattice of a polytope from its vertex-facet incidences*, Computational Geometry, 23 (2002), pp. 281–290.

[26] M. Kojima and M. Muramatsu, *A note on sparse SOS and SDP relaxations for polynomial optimization problems over symmetric cones*, Computational Optimization and Applications, 42 (2009), pp. 31–41.

[27] J. B. Lasserre, *Convergent SDP-relaxations in polynomial optimization with sparsity*, SIAM Journal on Optimization, 17 (2006), pp. 822–843.

[28] A. N. Letchford and M. M. Sørensen, *A new separation algorithm for the Boolean quadric and cut polytopes*, Discrete Optimization, 14 (2014), pp. 61–71.

[29] J. Luedtke, M. Namazifar, and J. Linderoth, *Some results on the strength of relaxations of multilinear functions*, Mathematical Programming, 136 (2012), pp. 325–351.

[30] E. M. Macambira and C. C. de Souza, *The edge-weighted clique problem: Valid inequalities, facets and polyhedral computations*, European Journal of Operational Research, 123 (2000), pp. 346–371.

[31] F. Margot, *Composition de polytopes combinatoires une approche par projection*, PhD thesis, École polytechnique fédérale de Lausanne, 1995.

[32] G. P. McCormick, *Computability of global solutions to factorable nonconvex programs: Part I — convex underestimating problems*, Mathematical Programming, 10 (1976), pp. 147–175.

[33] T. S. Motzkin, *Beiträge zur Theorie der linearen Ungleichungen*, PhD thesis, Universität Basel, 1936.

[34] M. Padberg, *The Boolean quadric polytope: Some characteristics, facets and relatives*, Mathematical Programming, 45 (1989), pp. 139–172.

[35] O. Roussel, *Pseudo-Boolean competition 2016*. http://www.cril.univ-artois.fr/PB16/, 2016. visited 08/2019.

[36] L. J. Watters, *Letter to the editor—reduction of integer polynomial programming problems to zero-one linear programming problems*, Operations Research, 15 (1967), pp. 1171–1174.

[37] Y. Yajima and T. Fujie, *A polyhedral approach for nonconvex quadratic programming problems with box constraints*, Journal of Global Optimization, 13 (1998), pp. 151–170.